# 集成电路原理与设计

# 导线

## *Wire*

谭志超

zhichaotan@zju.edu.cn

# Goals

- Understanding the design metrics that govern digital design is crucial
- Determining and quantifying interconnect parameters
- Introducing circuit models for interconnect wires
- Technology scaling and its impact on interconnect

***Design metrics of the gate***

- ***Cost:*** *complexity, area*
- ***Integrity and robustness:*** *static (or steady-state) behavior*
- ***Performance:*** *dynamic (or transient) response*
- ***Energy efficiency:*** *energy and power consumption*

# Outline

- Review: Quantity Metrics of Digital Design
- Wire: A First Glance
- Interconnect Parameters: R, C, L
- Electrical Wire Models

# Cost

- NRE (non-recurrent engineering) cost or *fixed cost*
  - Design Time and Effort, Mask Generation
  - One-time Cost Factor
- Recurrent cost or *variable cost*
  - Silicon Processing, Packaging, Test
  - Proportional to Volume
  - Proportional to Chip Area

**Cost per IC = variable cost per IC + fixed cost/volume**

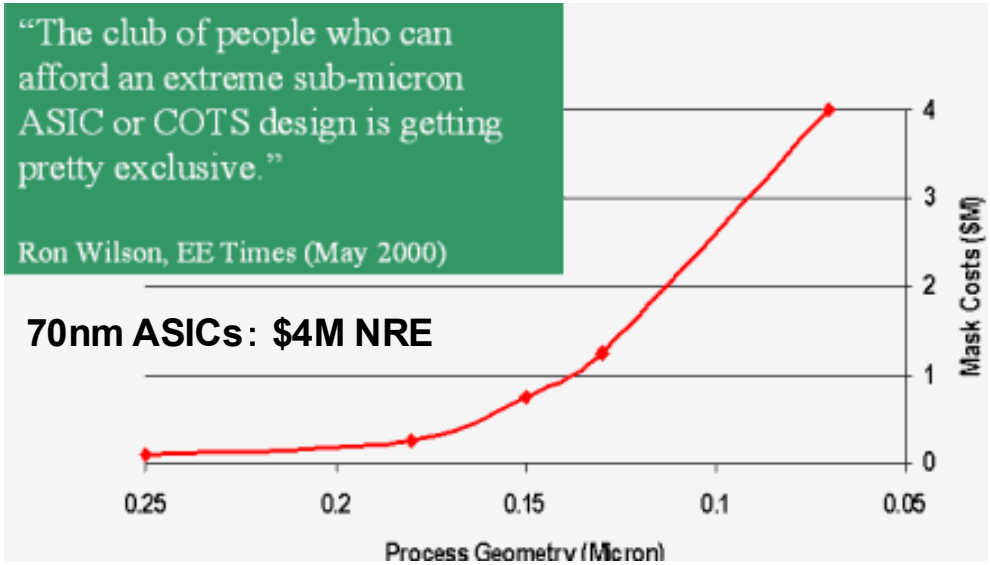

# -- Yield（良率，成品率）

up to 12″ (30cm)

Yield: $Y = \frac{\text{No. of good chips per wafer}}{\text{Total number of chips per wafer}} \times 100\%$

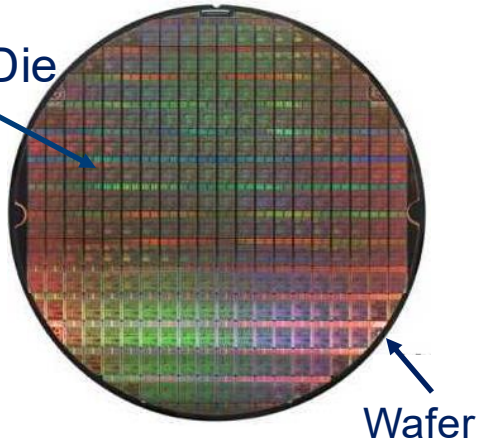


$$\text{Die cost} = \frac{\text{Wafer cost}}{\text{Dies per wafer} \times \text{Die yield}}$$

$$\text{Dies per wafer} = \frac{\pi \times (\text{wafer diameter}/2)^2}{\text{die area}} - \frac{\pi \times \text{wafer diameter}}{\sqrt{2 \times \text{die area}}}$$

$$\text{die yield} = \left(1 + \frac{\text{defects per unit area} \times \text{die area}}{\alpha}\right)^{-\alpha} \quad (\alpha \approx 3)$$

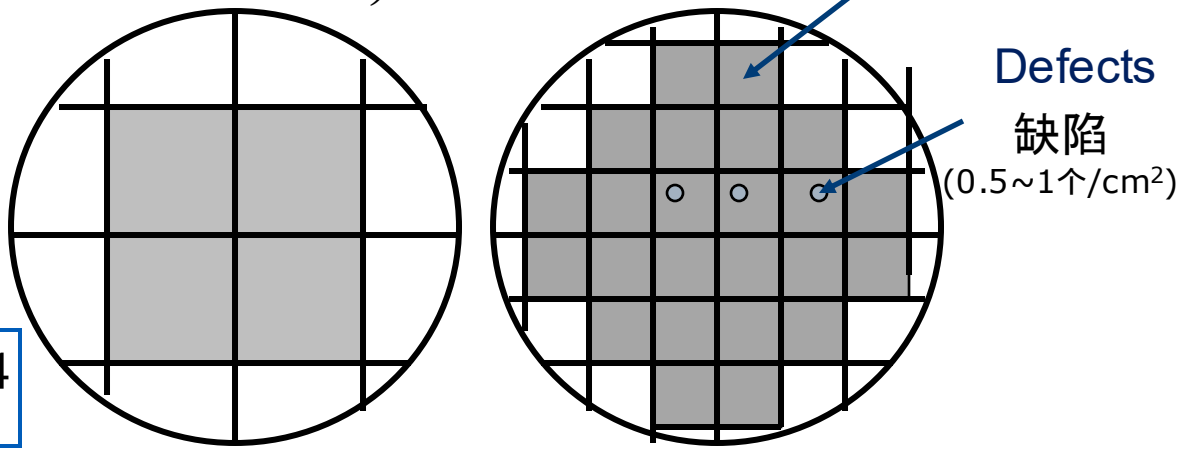


$$\boxed{\text{die cost} = f(\text{die area})^4}$$

# Reliability – Noise

**Noise**: *unwanted variation* of voltages and currents at the logic node.

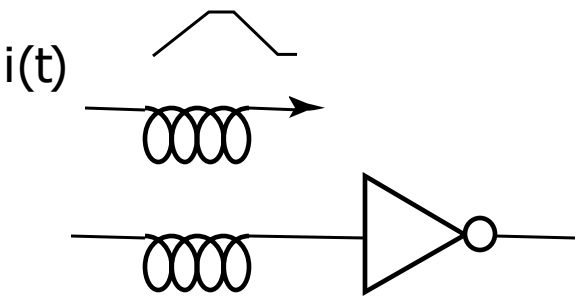


Inductive coupling

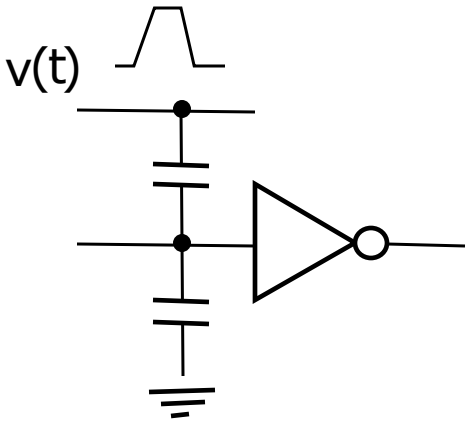


Capacitive coupling

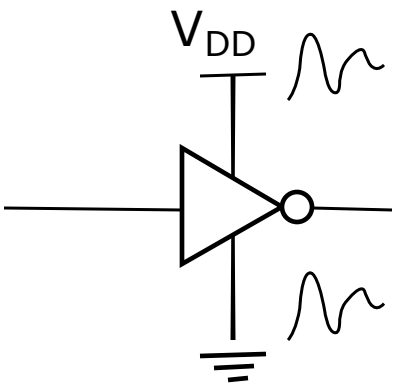


Power and GND

*How to cope with all these disturbances is one of the main challenges in the design of high-performance digital circuits.*

# -- Voltage Transfer Characteristic (VTC)

- VTC or DC operation for an inverting gate

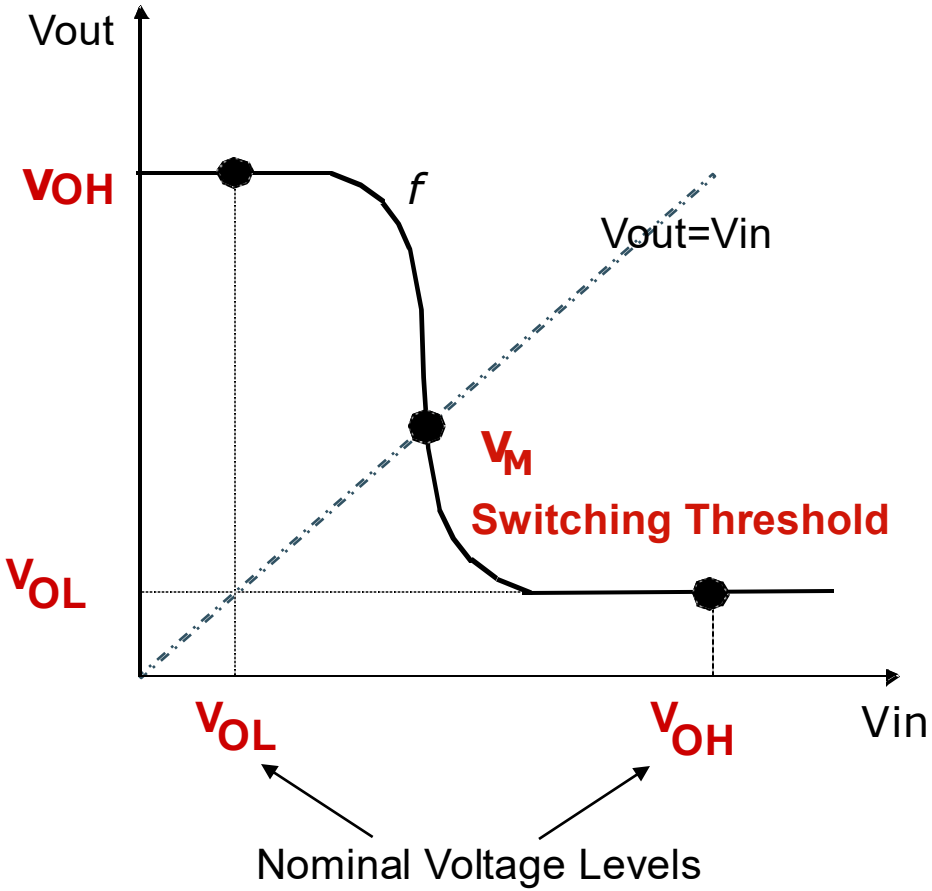


$$V_{OH} = f(V_{OL})$$
$$V_{OL} = f(V_{OH})$$
$$V_M = f(V_M)$$

# Relationship between voltage and logic levels

- A range of acceptable voltages

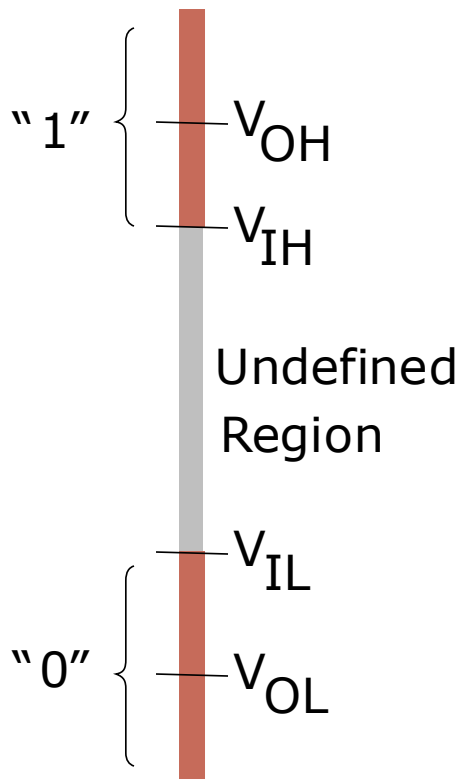


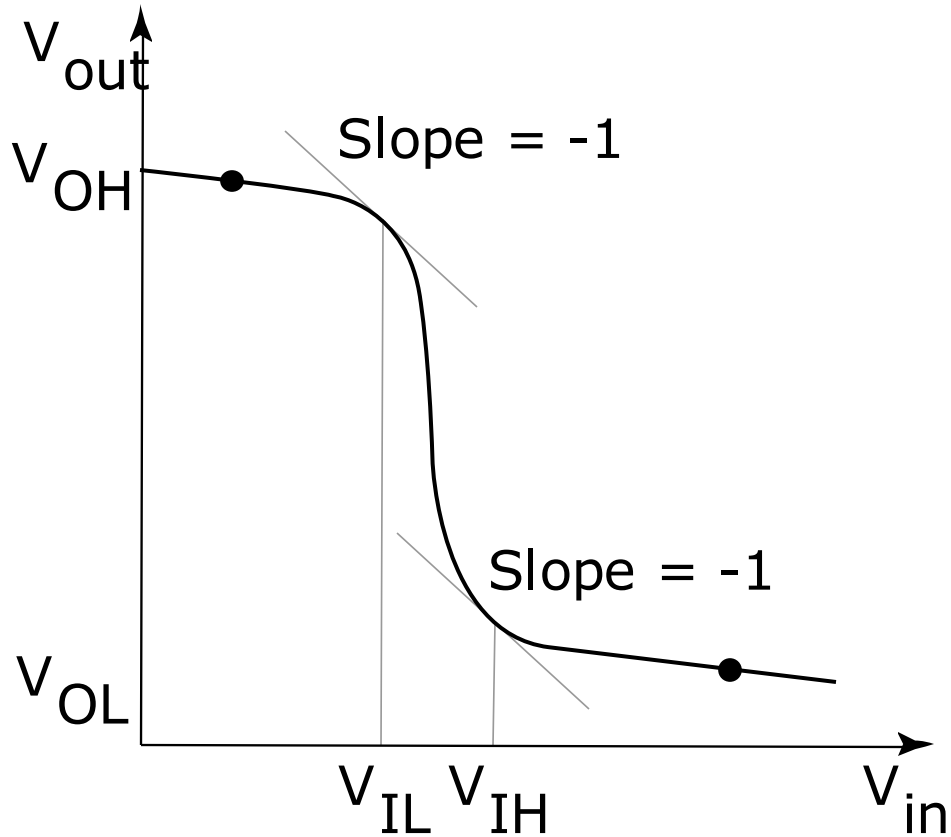


Undefined region (Transition width, TW)

# -- Noise Margin

- “0” and “1” intervals be as large as possible => robust and intensive to noise disturbances
- Noise margin: the levels of noise that can be sustained when gates are cascaded.

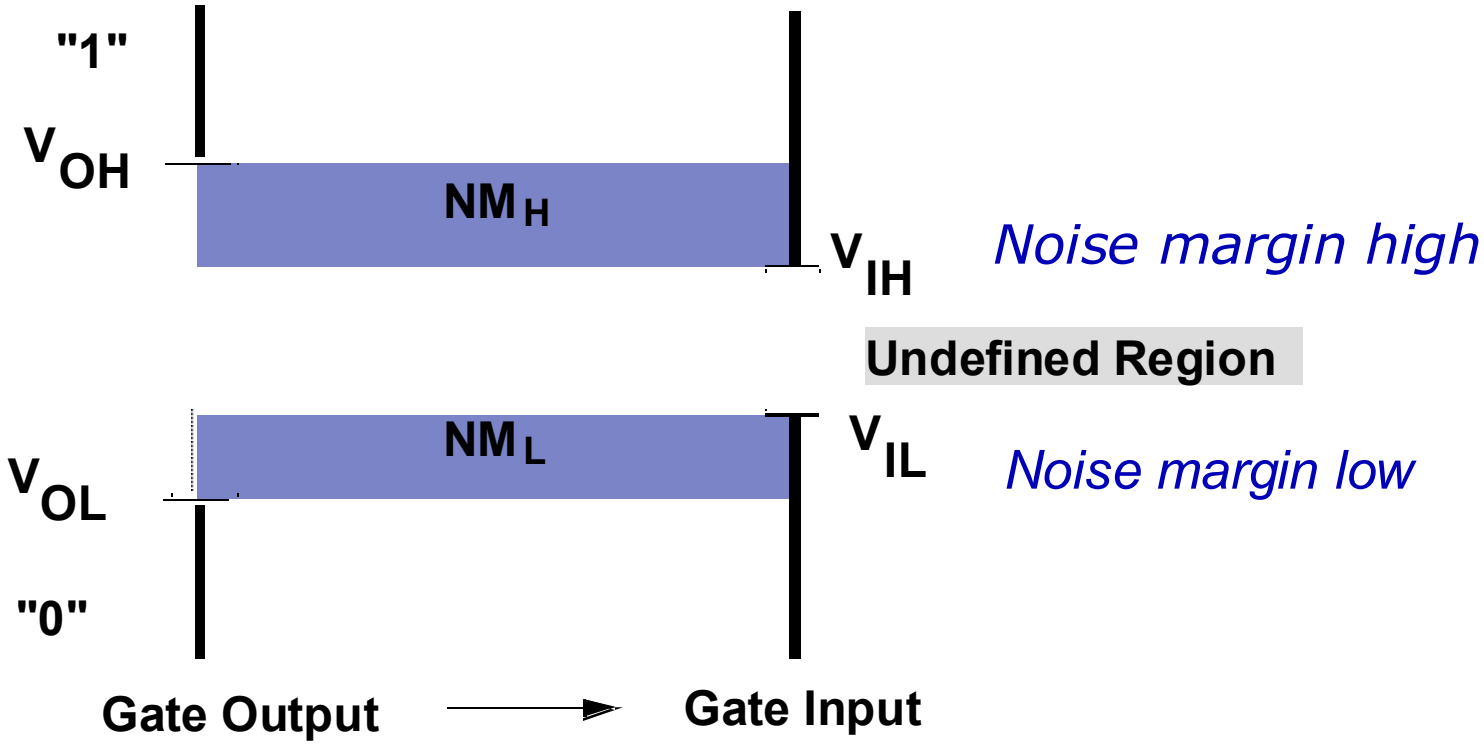

# -- Fan-in and Fan-out

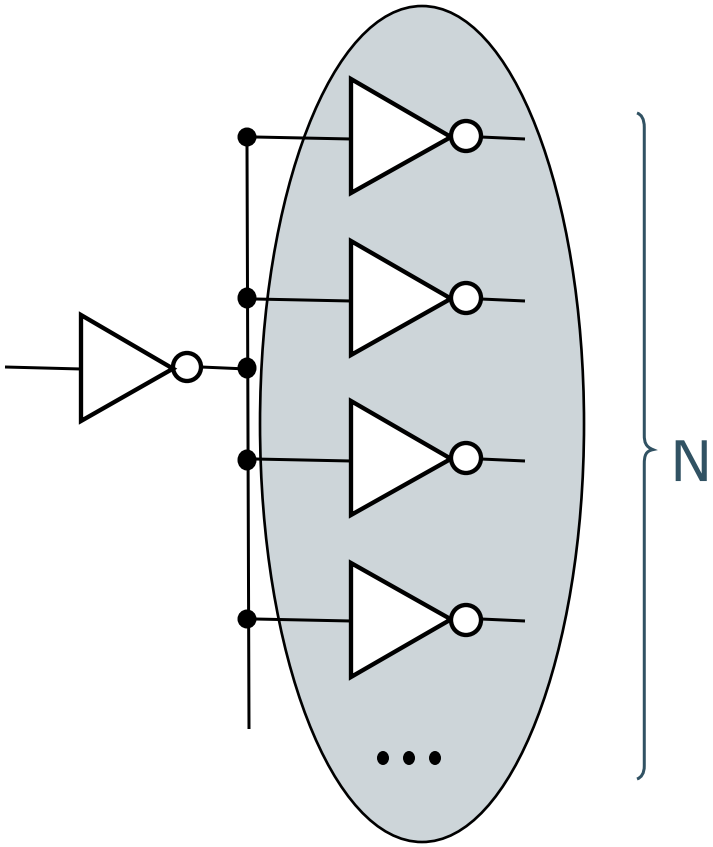


Fan-out N

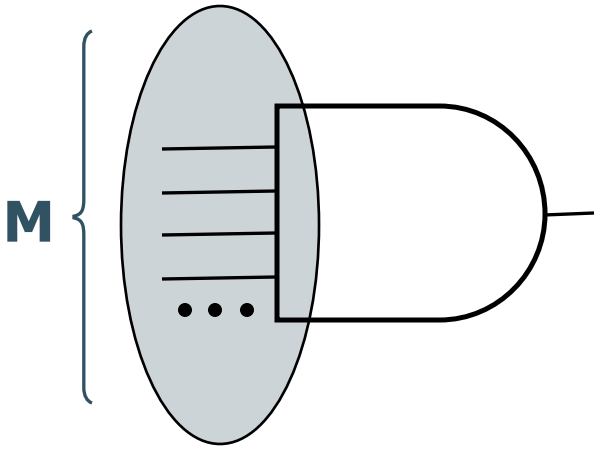


Fan-in M

# -- Ideal Gate

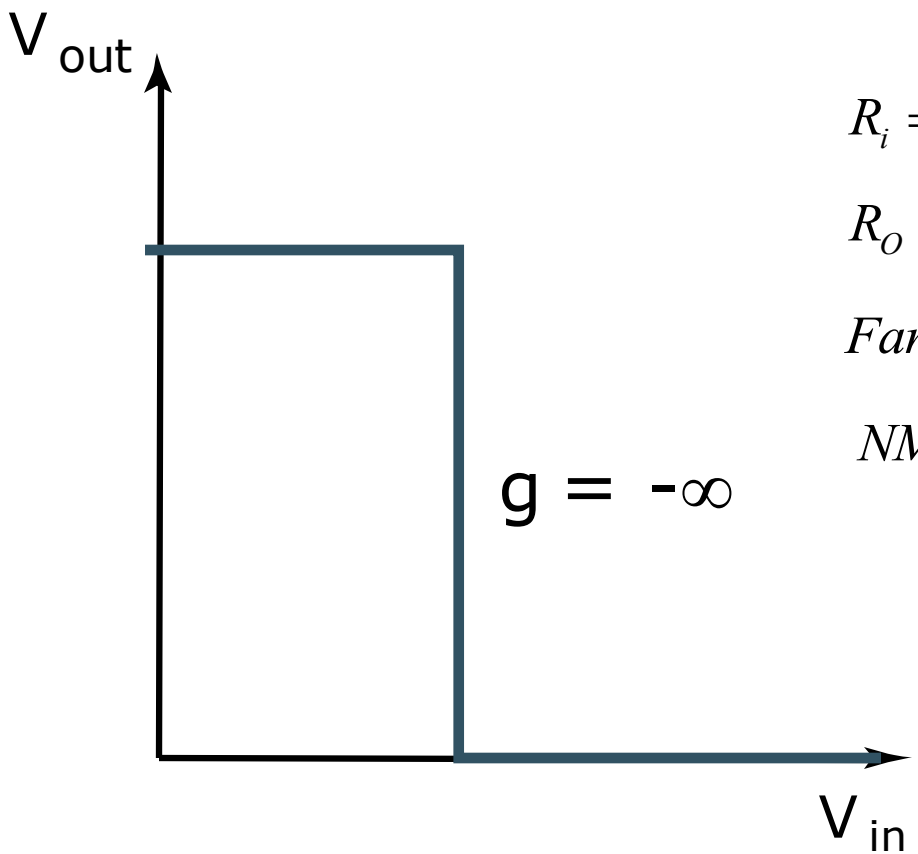


$$R_i = \infty$$

$$R_O = 0$$

$$Fanout = \infty$$

$$NM_H = NM_L = V_{DD}/2$$

# Speed: Delay Definition

- Propagation delay $t_p = \frac{t_{pLH} + t_{pHL}}{2}$

- $t_f$ $t_r$

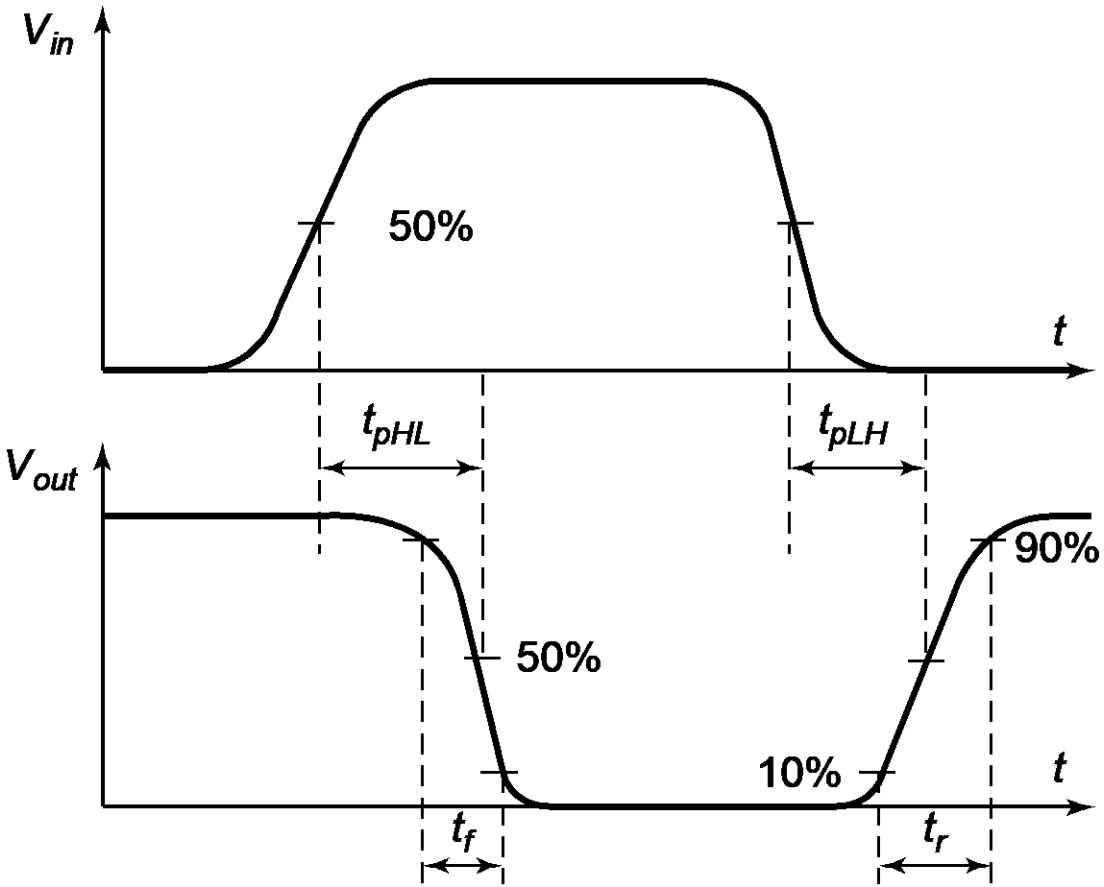

# Example: *First-order RC network*

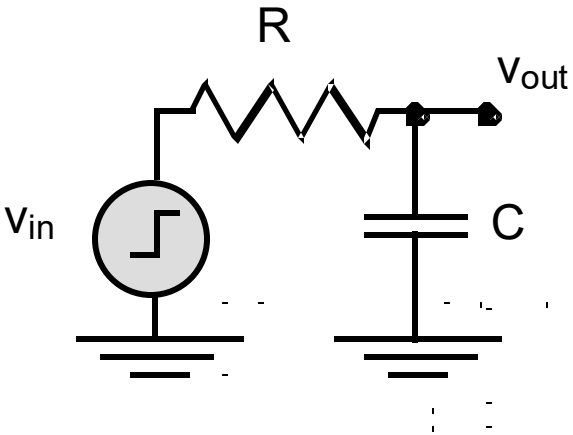


$$v_{out}(t) = (1 - e^{-t/\tau})\ V$$

$$t_p = \ln(2)\ t = 0.69\ RC$$

$$t_{0.1\text{-}0.9} = \ln(9)\ t = 2.2\ RC$$

# Power Dissipation

- Instantaneous power:

$$p(t) = v(t)i(t) = V_{supply}i(t)$$

- Peak power:

$$P_{peak} = V_{supply}i_{peak}$$

- Average power:

$$P_{ave} = \frac{1}{T}\int_{t}^{t+T} p(t)dt = \frac{V_{supply}}{T}\int_{t}^{t+T} i_{supply}(t)dt$$

# Example: *First-order RC network*

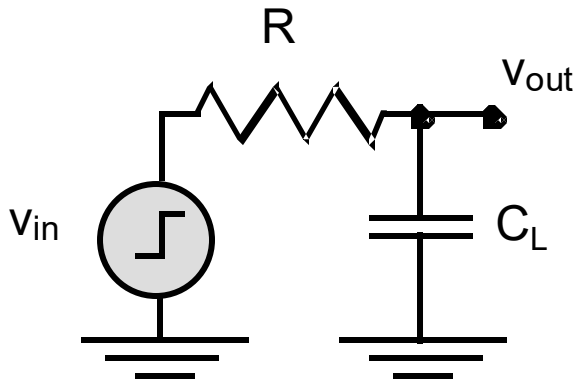


$$E_{0\to 1} = \int_0^T P(t)dt = V_{dd}\int_0^T i_{supply}(t)dt = V_{dd}\int_0^{Vdd} C_L dV_{out} = C_L \bullet V_{dd}^2$$

$$E_{cap} = \int_0^T P_{cap}(t)dt = \int_0^T V_{out} i_{cap}(t)dt = \int_0^{Vdd} C_L V_{out} dV_{out} = \frac{1}{2} C_L \bullet V_{dd}^2$$

- The other half is dissipated as heat in the R

# Interconnect

## 电子系统中的互连线

同轴电缆　三层平带线　微带线　导线在接地平面上

$$CL = \varepsilon\mu$$

*C*：电容，*L*：电感

| | W | R | C | L |
|---|---|---|---|---|
| 芯片上互连线 | 0.6μm | 150kΩ/m | 200pf/m | 600nH/m |
| PC板上互连线 | 150μm | 5Ω/m | 100pf/m | 300nH/m |
| 美国标准双股线 | 511μm | 0.08Ω/m | 40pf/m | 400nH/m |

# Modern Interconnect

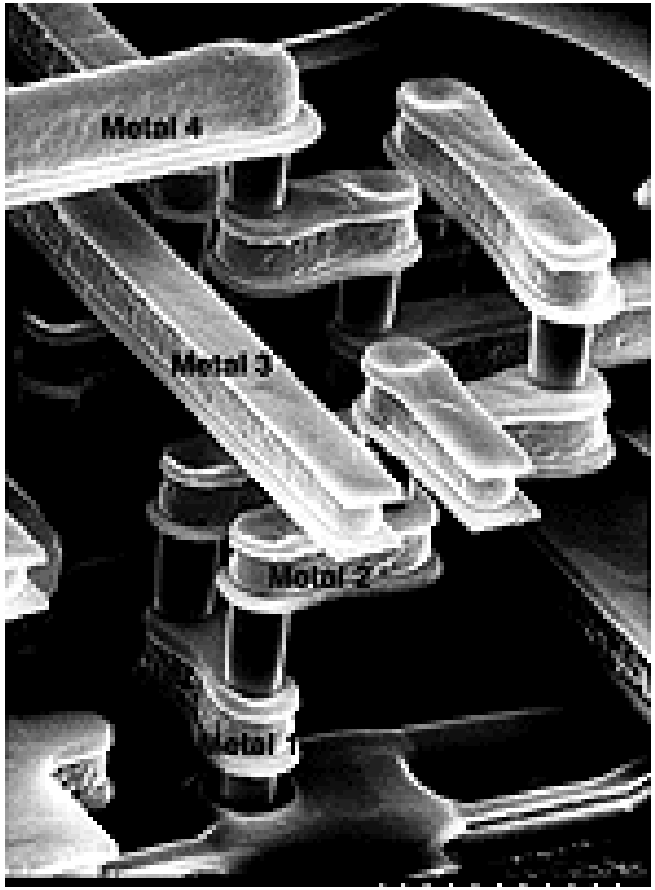


## *Layer Stack*

- **AMI 0.6 μm process: 3 metal layers**

  *M1: within-cell routing*

  *M2: vertical routing between cells*

  *M3: horizontal routing between cells*

- **Modern processes:6-10+ metal layers**

  *M1: thin, narrow (< 3λ)*

  *(High density cells)*

  *Mid layers: thicker and wider*

  *(density vs. speed)*

  *Top layers: thickest*

  (For $V_{DD}$, GND, clk)

# Intel 0.25μm Process

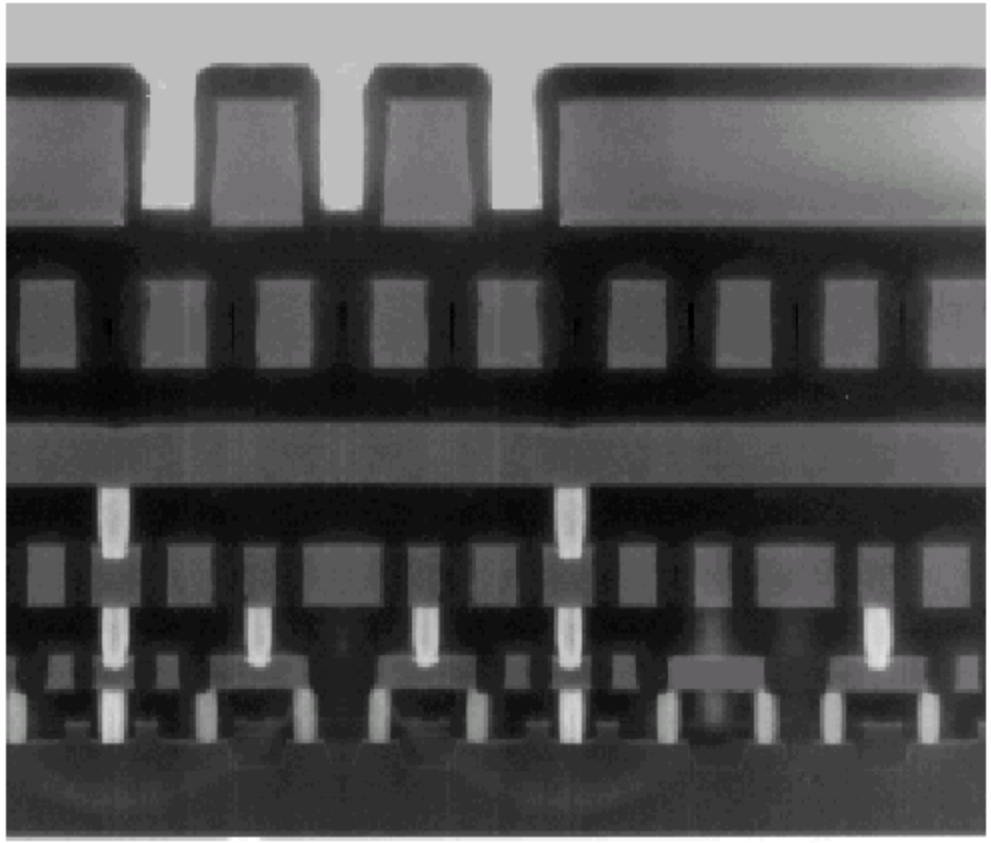

5 metal layers
Ti/Al - Cu/Ti/TiN
Polysilicon dielectric

| LAYER | PITCH | THICK | A.R. |
|---|---|---|---|
| Isolation | 0.67 | 0.40 | - |
| Polysilicon | 0.64 | 0.25 | - |
| Metal 1 | 0.64 | 0.48 | 1.5 |
| Metal 2 | 0.93 | 0.90 | 1.9 |
| Metal 3 | 0.93 | 0.90 | 1.9 |
| Metal 4 | 1.60 | 1.33 | 1.7 |
| Metal 5 | 2.56 | 1.90 | 1.5 |
| | μm | μm | |

Layer pitch, thickness and aspect ratio

# More Examples

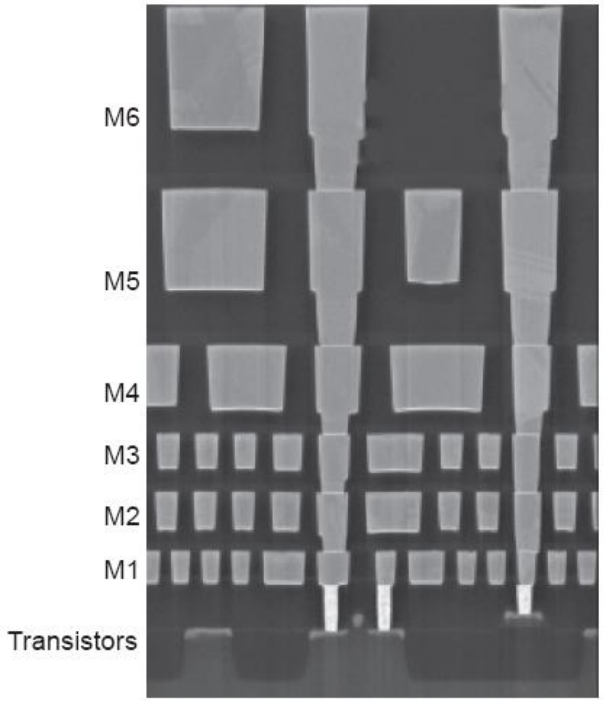


**Intel 90 nm Stack** [Thompson02]

1 μm

**Intel 45 nm Stack** [Moon08]

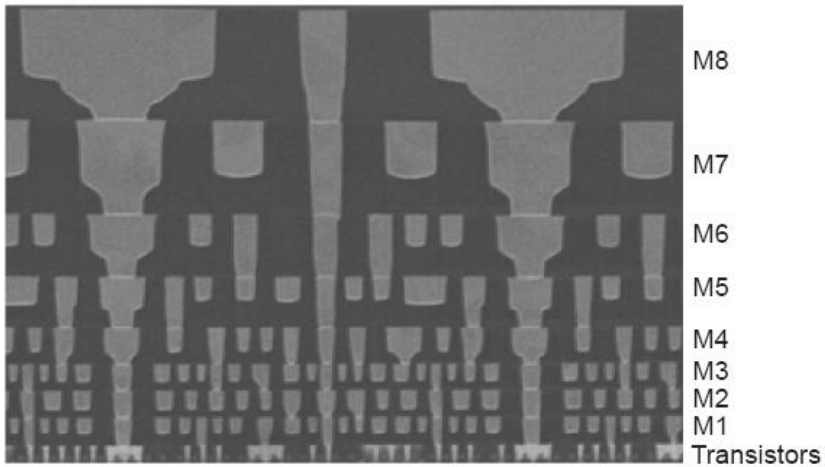


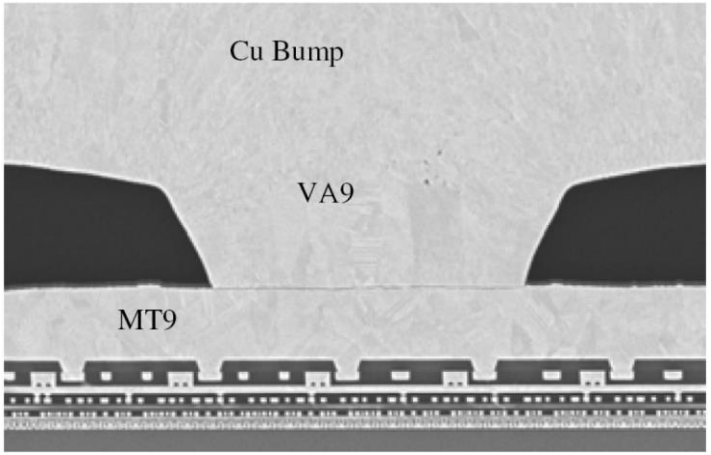


**FIGURE 6.3** SEM image of complete cross-section of Intel's 45 nm process including M9 and I/O bump (From [Moon08] with permission of Intel Corporation.)

# Wire Model

Parasitics: capacitance, resistance, inductance

- increase in propagation delay, or drop in performance
- an impact on power consumption
- an introduction of extra noise sources -> reliability

**Schematics**

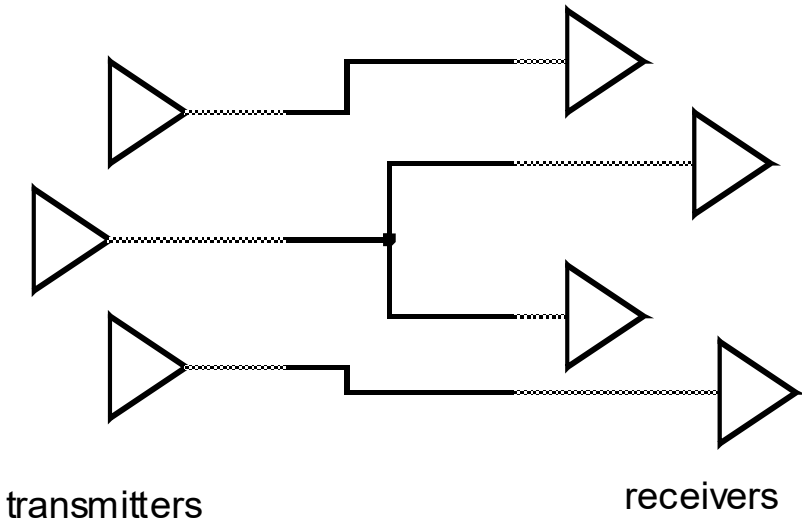


**Physical**

# Wire: Models

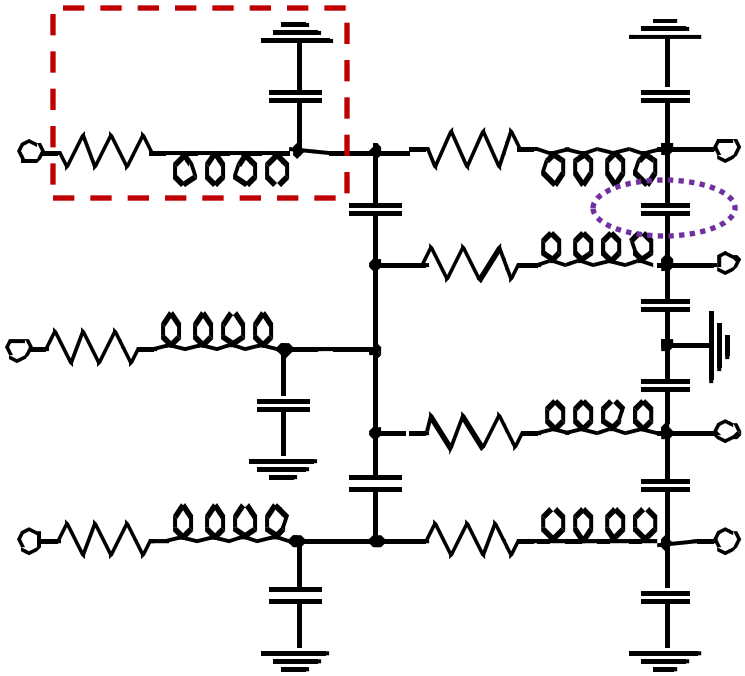

All-inclusive model

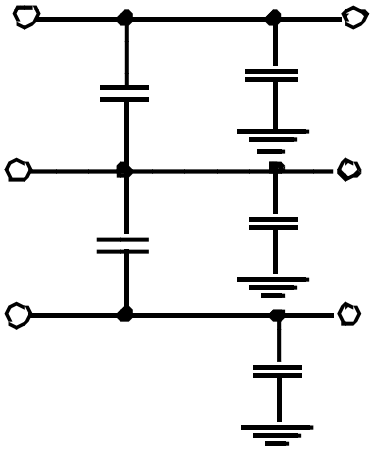

Capacitance-only model

# Wire: Parasitic Simplifications

- Inductive effects can be ignored
  - if the resistance of the wire is substantial enough (as is the case for long Al wires with small cross-section)
  - If the rise and fall times of the applied signals are **slow enough**
- Capacitance only model can be used
  - When the wire is short, or the cross-section is large,
  - The interconnect material has low resistivity,
- Interwire capacitance can be ignored, and all the parasitic capacitance can be modeled as capacitance to ground
  - when the separation between neighboring wires is large
  - when the wires run together for only a short distance

# Interconnect Modeling

- Current in a wire is analogous to current in a pipe
  -- **Resistance:** narrow size impedes flow
  -- **Capacitance:** trough under the leaky pipe must fill first
  -- **Inductance:** paddle wheel inertia opposes changes in flow rate

  *(Negligible for most wires)*

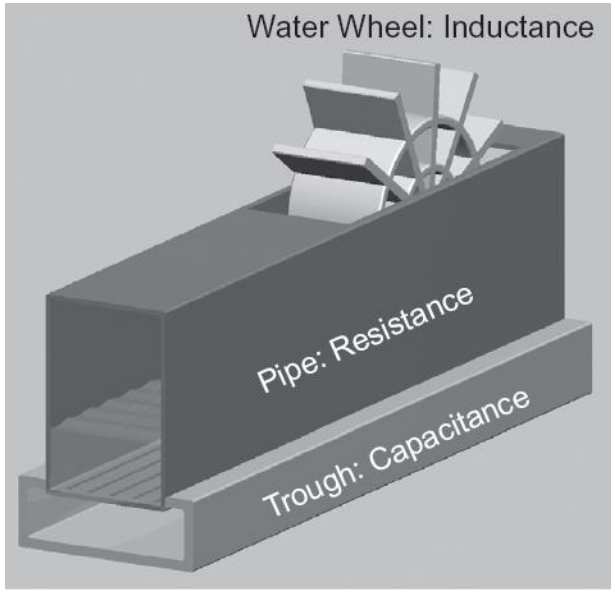


- Classes of parasitics
  -- **Capacitive**
  -- **Resistive**
  -- **Inductive**

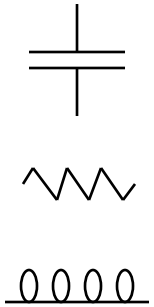

# Wire Resistance

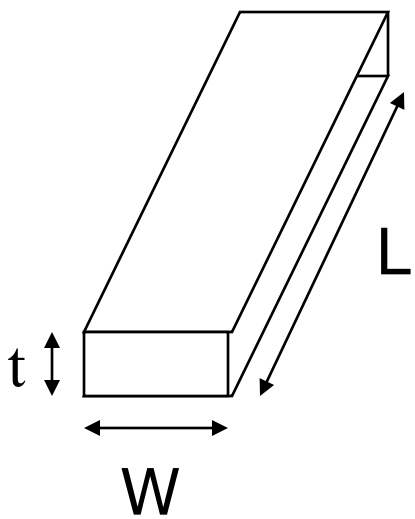


$$R = \frac{\rho L}{A} = \frac{\rho}{t}\frac{L}{W} = R_{\square}\frac{L}{W}$$

方块电阻

$R_{\square}$: Sheet Resistance

| Material | ρ(Ω-m) |
|---|---|
| Silver (Ag) | $1.6 \times 10^{-8}$ |
| *Copper (Cu)* | *$1.7 \times 10^{-8}$* |
| Gold (Au) | $2.2 \times 10^{-8}$ |
| *Aluminum (Al)* | *$2.7 \times 10^{-8}$* |
| Tungsten (W) | $5.5 \times 10^{-8}$ |

| Material | $R_{\square}$ (Ω/□) |
|---|---|
| n, p well diffusion | 1000 to 1500 |
| n+, p+ diffusion | 50 to 150 |
| n+, p+ diffusion with silicide | 3 to 5 |
| polysilicon | 150 to 200 |
| polysilicon with silicide | 4 to 5 |
| Aluminum | 0.05 to 0.1 |

# Wire Resistance: $\rho$ vs. $R_{\square}$

- $\rho$: *resistivity* (Ω*m)
- $R_{\square}$: *sheet resistance* (Ω /□)
  - □ is a dimensionless unit(!)

$$R = \frac{\rho L}{A} = R_{\mathrm{W}} \frac{L}{W}$$

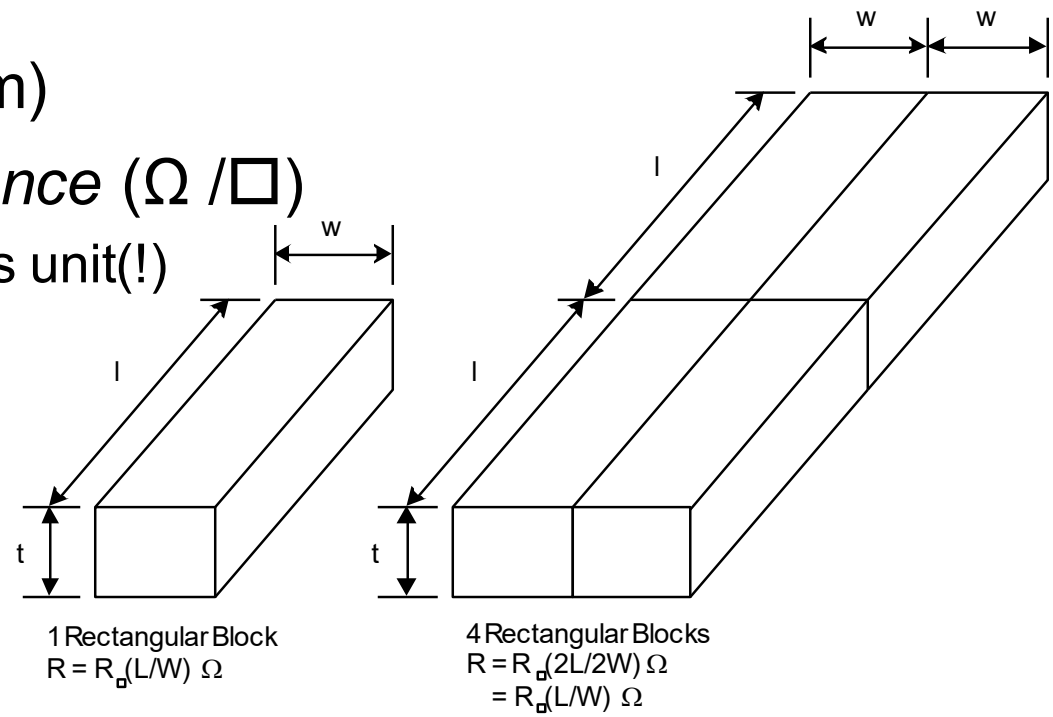


**Example**

The Al wire is 10cm long and 1μm wide and is routed on the first Al layer：

$$R_{wire} = 0.075\Omega/\mathrm{W} \times \left(0.1 \times 10^{6}\,\mu m\right) / 1\mu m = 7.5k\Omega$$

Poly(175Ω/□) ：17.5MΩ； Silicided Polysilicon(4Ω/□) ：400kΩ

# Dealing with Resistance

- Use better interconnect materials
  - reduce average wire-length
  - e.g. copper, silicides
- More interconnect layers
  - reduce average wire-length

Silicides: $WSi_2$, $TiSi_2$, $PtSi_2$ and TaSi
Conductivity: 8-10 times better than Poly

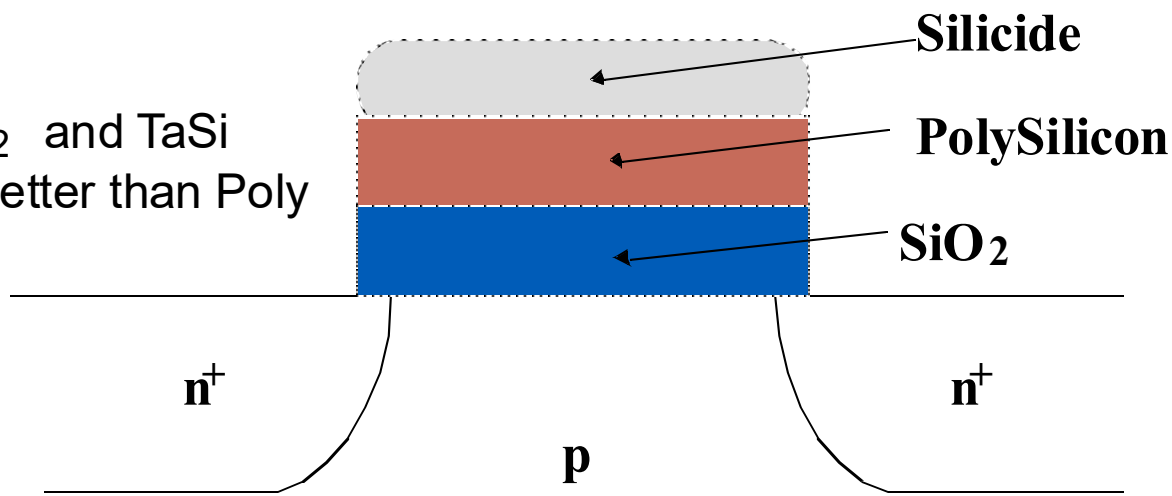

# Choice of Metals

- Until 180 nm generation, most wires were aluminum
- Contemporary processes normally use copper
  - Cu atoms diffuse into silicon and damage FETs
  - Must be surrounded by a diffusion barrier

| Metal | Bulk resistivity ($\mu\Omega \cdot$ cm) |
|---|---|
| Silver (Ag) | 1.6 |
| **Copper (Cu)** | **1.7** |
| Gold (Au) | 2.2 |
| Aluminum (Al) | 2.8 |
| Tungsten (W) | 5.3 |
| Titanium (Ti) | 43.0 |

# *Appendix：Copper Issues*

- Copper wires diffusion barrier has high resistance
- Copper is also prone to *dishing* during polishing
- Effective resistance is higher

$$R = \frac{\rho}{\left(t - t_{\text{dish}} - t_{\text{barrier}}\right)} \frac{l}{\left(w - 2t_{\text{barrier}}\right)}$$

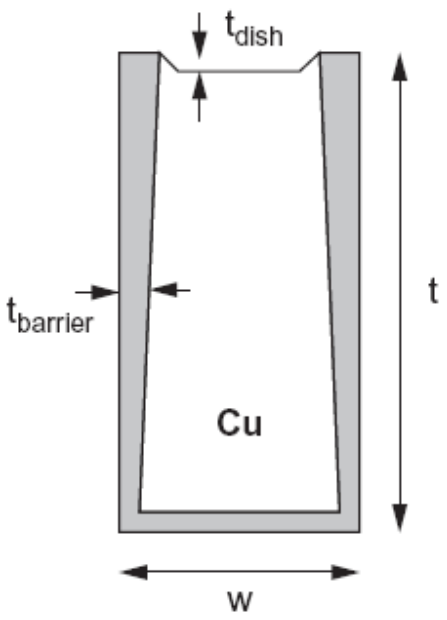

# Contacts Resistance

- Contacts Resistance: transitions between routing layers add extra resistance to a wire
  - Contacts: **5-20Ω** vias: **1-5 Ω**
  - **Preferred routing strategy: keep signal wire on a single layer**
- Use many contacts for lower R
  - Many small contacts for current crowding around periphery

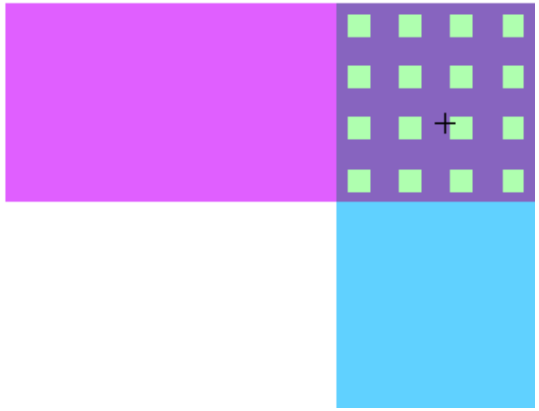

# Outline

- Review: Quantity Metrics of Digital Design
- Wire: A First Glance
- Interconnect Parameters:  R, C, L
  - Resistance
  - Capacitor
  - Inductance
- Electrical Wire Models
- Perspective

# Capacitance: Parallel-Plate Model

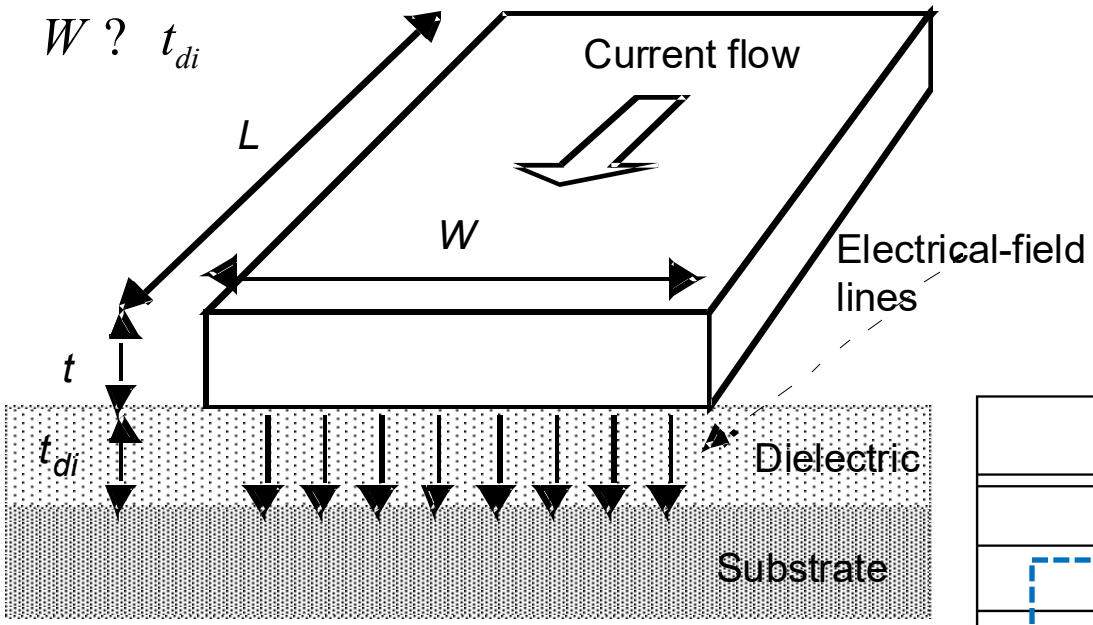


$$c_{int} = \frac{\varepsilon_{di}}{t_{di}} WL$$

**Permittivity Constant**

| Material | $\varepsilon_r$ |
|---|---|
| Free space | 1 |
| Aerogels | ~1.5 |
| Polyimides (organic) | 3-4 |
| Silicon dioxide | 3.9 |
| Glass-epoxy (PC board) | 5 |
| Silicon Nitride ($Si_3N_4$) | 7.5 |
| Alumina (package) | 9.5 |
| Silicon | 11.7 |

$$\varepsilon_0 = 8.854 \times 10^{-12}\ F/m$$

# Capacitance Trends

- Parallel-plate equation: $C = \varepsilon_{ox} A / t_{di}$
  - Wires are not parallel plates, but obey trends
  - Increasing area (W, L) increases capacitance
  - Increasing distance ($t_{di}$) decreases capacitance
- Dielectric constant
  - $\varepsilon_{ox} = k\varepsilon_0$
    - $\varepsilon_0 = 8.85 \times 10^{-14}$ F/cm
    - k = 3.9 for $SiO_2$ (ideal oxide, 4.1 with phosphorous)
- Processes are starting to use low-k dielectrics
  - $k \approx 3$ (or less) as dielectrics use air pockets

# Fringing Capacitance边缘电容

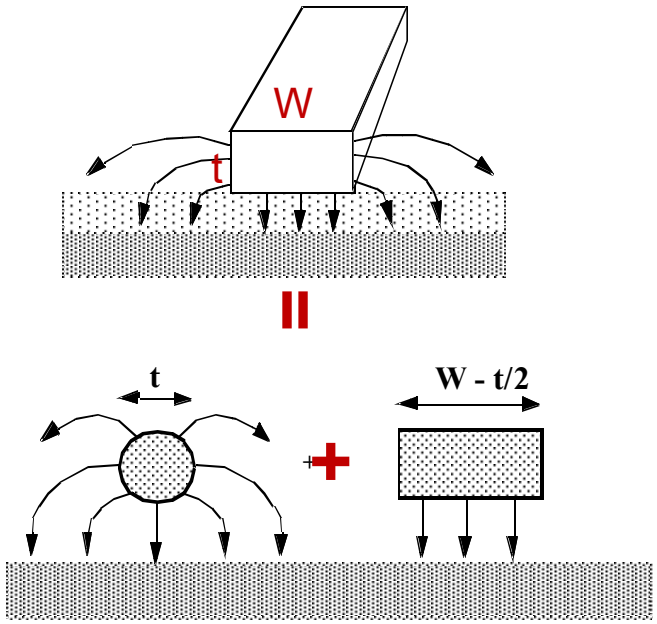


$$c_{wire} = c_{pp} + c_{fringe} = \frac{w\varepsilon_{di}}{t_{di}} + \frac{2\pi\varepsilon_{di}}{\log(\frac{2t_{di}}{t} + 1)}$$

*w*=*W*-*t*/2

- Capacitance of a line without neighbors is approximated as

$$C_{tot} = \varepsilon_{ox} l \left[ \frac{w}{h} + 0.77 + 1.06\left(\frac{w}{h}\right)^{0.25} + 1.06\left(\frac{t}{h}\right)^{0.5} \right]$$

--the empirical formula is accurate to 6% for AR < 3.3

# Capacitance: Fringing vs. Parallel Plate

## Fringing versus Parallel Plate

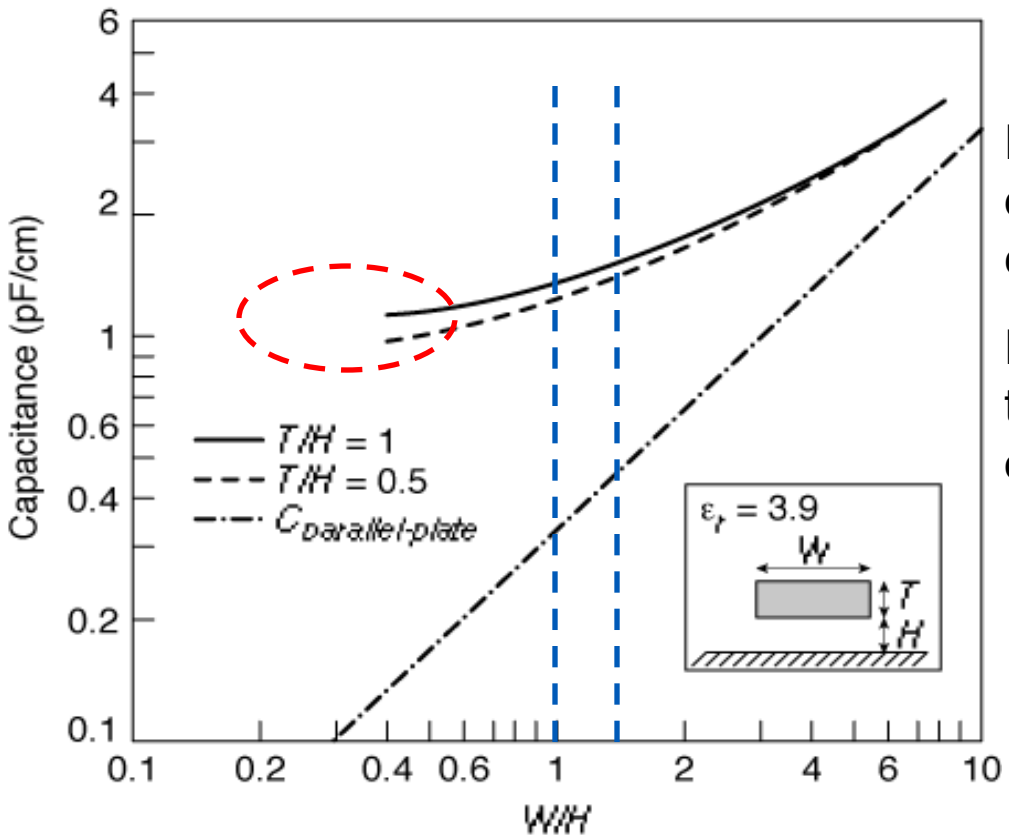


For W/H<1.5, the fringe component dominates the parallel-plate component.

Fringing capacitance can increase the overall capacitance by a factor of 10 or more.

Note that the cap level levels off to a constant value of approx: 1pf/cm

# Interwire Capacitance

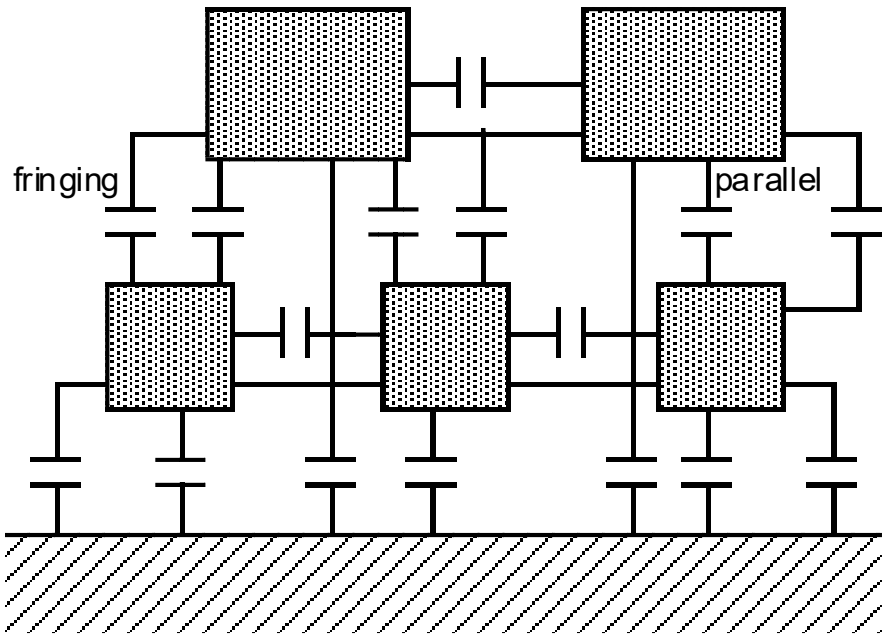


$C_{wire} = C_{pp} + C_{fringe} + C_{interwire}$

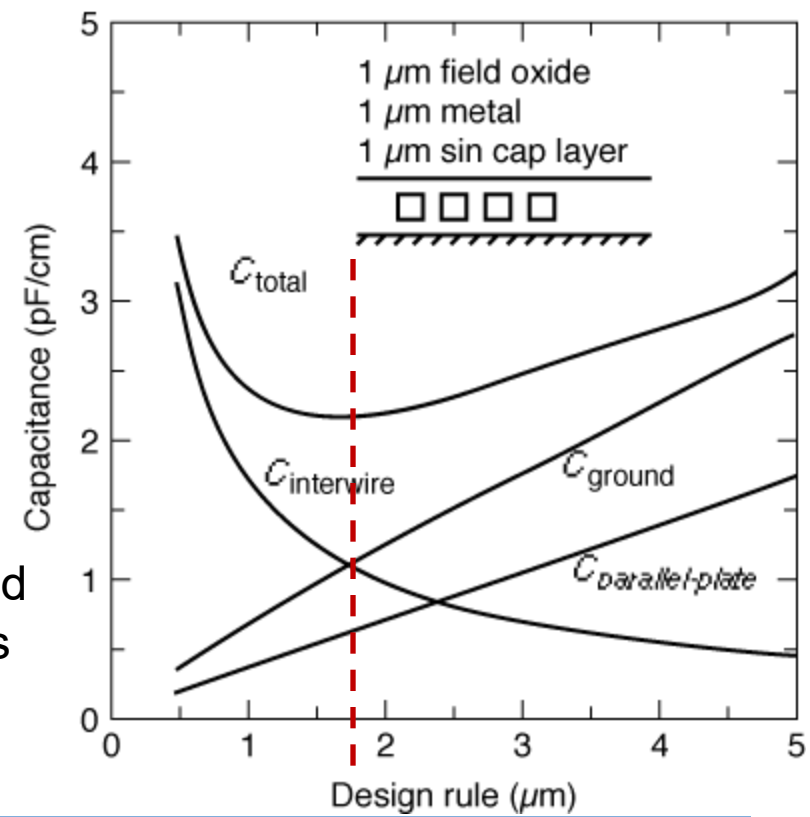


- When W < 1.75H, interwire capacitance: dominate
- Interwire capacitance is more pronounced for wires in the higher interconnect layers (further from the substrate)

# Interwire Capacitances: 0.25μm CMOS

| | Field | Active | Poly | Al1 | Al2 | Al3 | Al4 |
|---|---|---|---|---|---|---|---|
| Poly | 88 | | | | *pp: in aF/μm²* | | |
| | 54 | | | | *fringe: in aF/μm* | | |
| Al1 | 30 | 41 | 57 | | | | |
| | 40 | 47 | 54 | | | | |
| Al2 | 13 | 15 | 17 | 36 | | | |
| | 25 | 27 | 29 | 45 | | | |
| Al3 | 8.9 | 9.4 | 10 | 15 | 41 | | |
| | 18 | 19 | 20 | 27 | 49 | | |
| Al4 | 6.5 | 6.8 | 7 | 8.9 | 15 | 35 | |
| | 14 | 15 | 15 | 18 | 27 | 45 | |
| Al5 | 5.2 | 5.4 | 5.4 | 6.6 | 9.1 | 14 | 38 |
| | 12 | 12 | 12 | 14 | 19 | 27 | 52 |

| 同一层 | Poly | Al1 | Al2 | Al3 | Al4 | Al5 |
|---|---|---|---|---|---|---|
| Interwire Cap | 40 | 95 | 85 | 85 | 85 | 115 |

aF/μm

单位长度的线间电容

# Multilayer Wire Capacitance

- Wire has capacitance per unit length
  - To neighbors
  - To layers above and below
- $C_{total} = C_{top} + C_{bot} + 2C_{adj}$

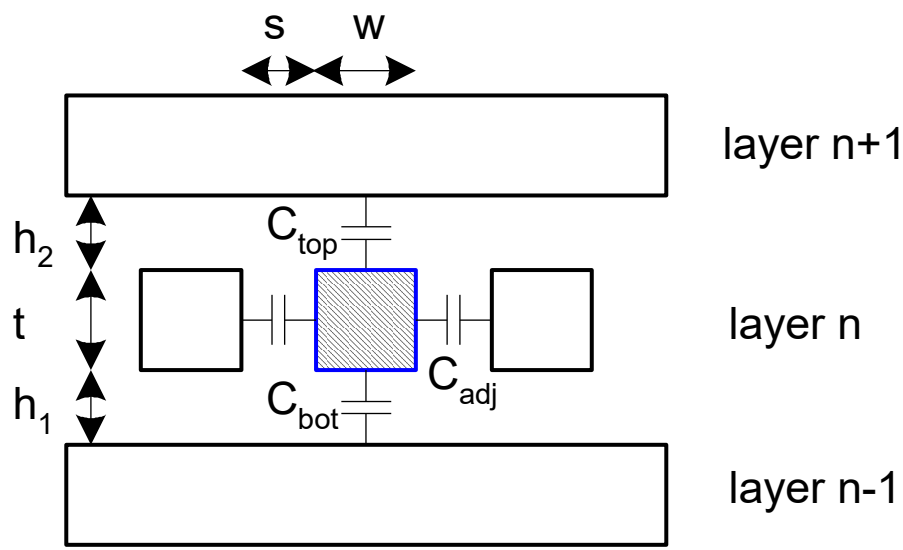

# Example：M2 Capacitance Data

- Typical dense wires have ~ 0.2 fF/mm
  - Compare to 1-2 fF/mm for gate capacitance

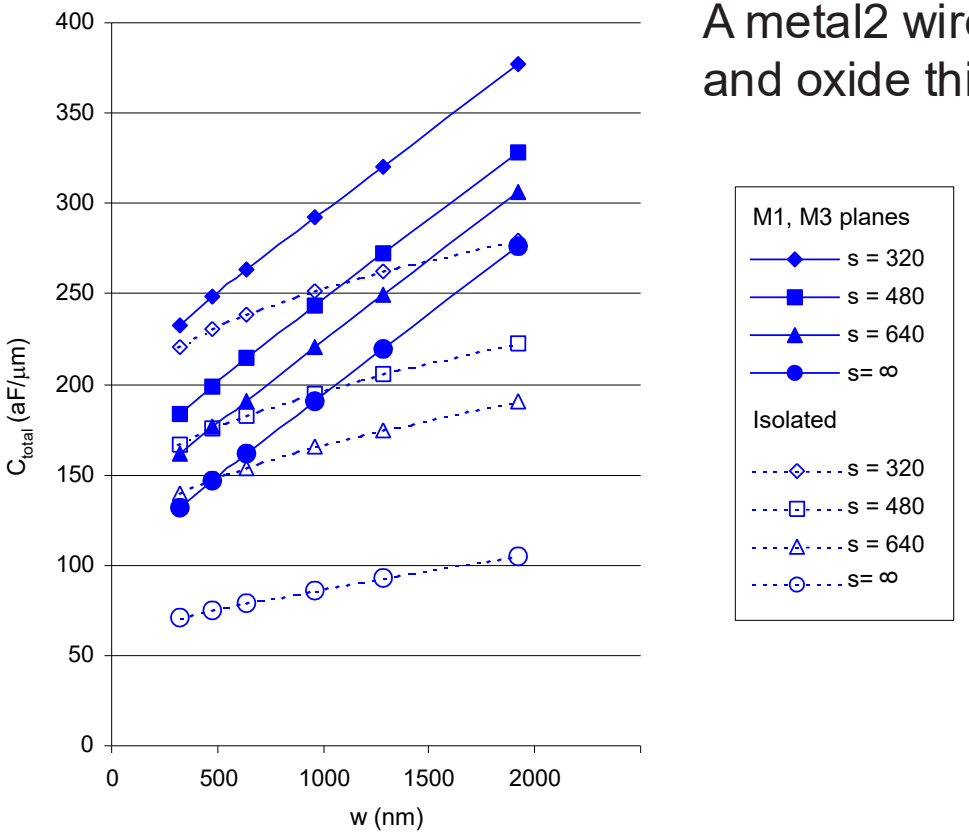


A metal2 wire in a 180 nm process with wire and oxide thicknesses of 0.7mm.

- For an isolated wire above the substrate, the capacitance is strongly influenced by spacing between conductors
- For a wire sandwiched between metal1 and metal3 planes, the capacitance is higher and is more sensitive to the width but less sensitive to spacing

# Diffusion & Polysilicon

- Rules of thumb
  - Use poly only for short runs
  - Shorter wires – lower R and C
  - Thinner wires – lower C but higher R

**Insights**

- Diffusion capacitance is very high (1-2 fF/mm)
  - Comparable to gate capacitance
  - Diffusion also has high resistance
  - Avoid using diffusion *runners* for wires!
- Polysilicon has lower C but high R
  - Use for transistor gates
  - Occasionally for very short wires between gates

# Skin Effect(趋肤效应)

At high frequency, currents tend to flow primarily on the surface of a conductor with the current density falling off exponentially with depth into the wire

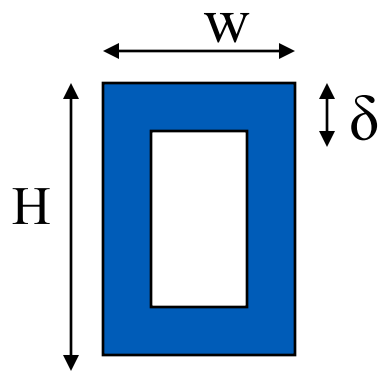


**Skin depth:**

$$\delta = \sqrt{\frac{\rho}{\pi f \mu}}$$

permeability: $\mu = 4\pi \times 10^{-7}$ H/m

$\delta$= 2.6 $\mu$m for Al at 1 GHz

⇨ the overall cross section is ~ 2(w+t)$\delta$

$$r(f) = \frac{\sqrt{\pi f \mu \rho}}{\pi \mu \left(\max(W,H)\right)^2}$$

- The onset of skin effect is at $f_s$ - where the skin depth is equal to half the largest dimension of the wire

$$f_s = \frac{4\rho}{\pi \mu (\max(W,H))^2}$$

An issue for **wide (tall)** wires in high frequency: **i.e., clocks!**

# Inductance

- On-chip inductance: ringing and overshoot effects, reflections of signal due to impendence mismatch, inductive coupling between lines, and switching noise due to *L*d*i*/d*t* voltage

$$\Delta V = L\frac{di}{dt}$$

- The capacitor c and the inductance l (per unit length) of a wire:

$$cl = \varepsilon\mu \qquad v = \frac{1}{\sqrt{cl}} = \frac{1}{\sqrt{\varepsilon\mu}} = \frac{c_0}{\sqrt{\varepsilon_r\mu_r}}$$

| Dielectric | $\varepsilon_r$ | Propagation speed (cm/nsec) |
|---|---|---|
| Vacuum | 1 | 30 |
| $SiO_2$ | 3.9 | 15 |
| PC board (epoxy glass) | 5.0 | 13 |
| Alumina (ceramic package) | 9.5 | 10 |

# Wire Delay Model: Ideal Wire

- Ideal wire simplistic
  - The same voltage is present at every segment of the wire at every point in time: *equipotential region*
  - early phases of the design process
  - only holds for *very short* wires, i.e., interconnects between *very* nearest neighbor gates

# Lumped Model

- **Lumped Model**

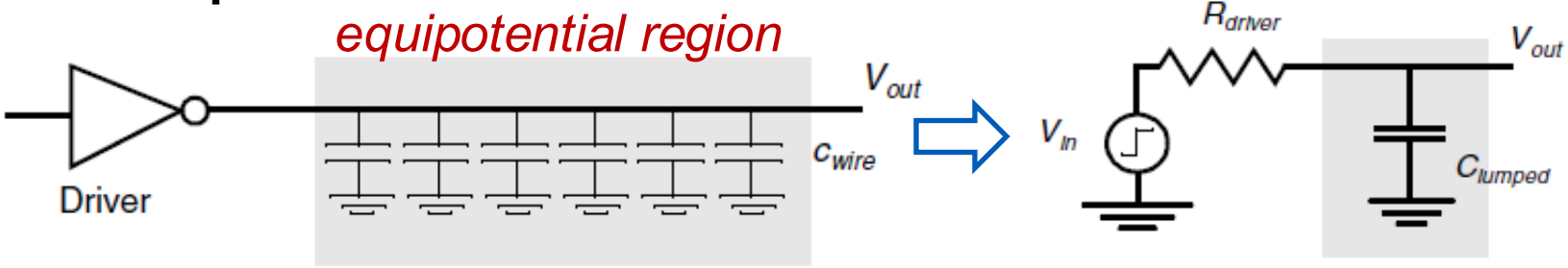


$$C_{lumped} = L \times c_{wire}$$

☆ simple, effective

**an ordinary differential equation**

- **Lumped RC model**
  - total wire resistance is lumped into a single R and total capacitance into a single C
  - good for short wires
  - pessimistic and inaccurate for long wires

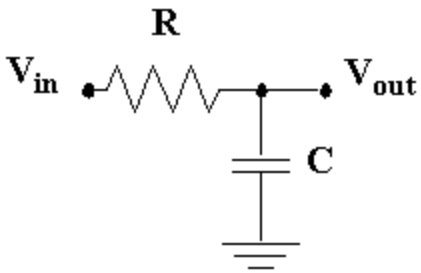

# Distributed RC Model

- A wire is a distributed circuit with a resistance and capacitance per unit length. Its behavior can be approximated with a number of lumped elements.
- Three standard approximations:
  - **L-model**: a large number of segments are required for accurate results => poor choice
  - **π-model**: three segments are sufficient to give results accurate to 3% [Sakurai83].
  - **T-model**: produces a circuit with one more node that is slower to solve by hand or with a circuit simulator

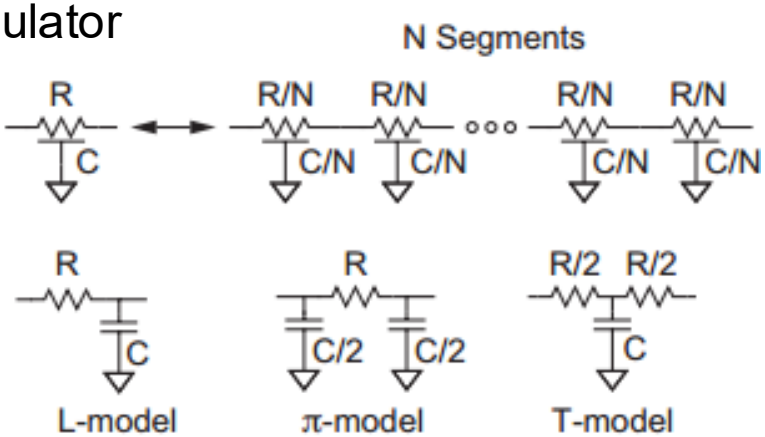


- Common practice to model long wires for simulation:

  **3–5 segment π-model**

# -- RC Tree Definitions

- A unique resistive path exists between the source node and any node of the network
  - Single input (source) node： s
  - All capacitors are between a node and GND
  - No resistive loops

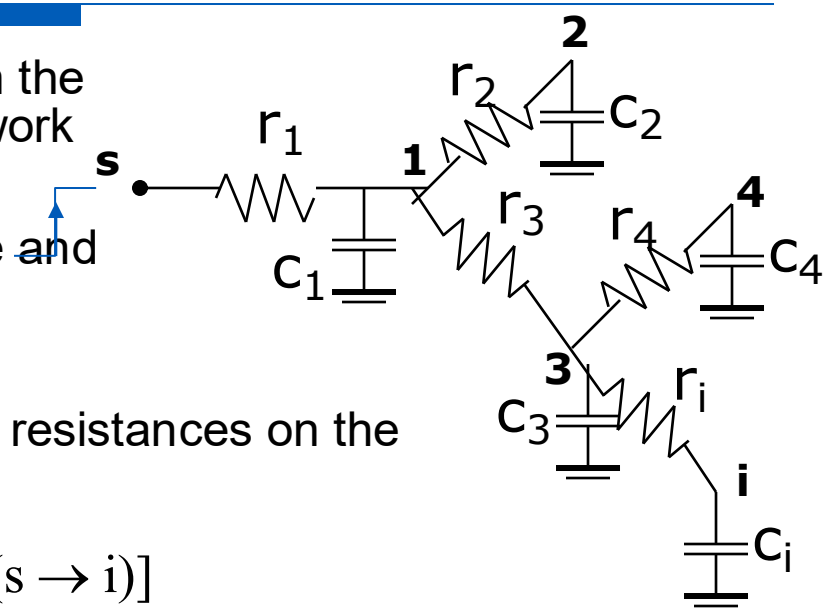


- **Path resistance 路径电阻** (sum of the resistances on the path from the input node ***s*** to node ***i***)

$$R_{ii} = \sum_{j=1}^{i} r_j \Rightarrow (r_j \in [\text{path}(s \to i)]$$

- **Shared path resistance共享路径电阻** (resistance shared along the paths from the input node ***s*** to nodes ***i*** and ***k***)

$$R_{ik} = \sum_{j=1}^{N} r_j \Rightarrow (r_j \in [\text{path}(s \to i) \cap \text{path}(s \to k)])$$

- **Elmore Delay**

$$\tau_{Di} = \sum_{k=1}^{N} C_k R_{ik} \Rightarrow \tau_{Di} = R_1C_1 + R_1C_2 + (R_1 + R_3)C_3 + (R_1 + R_3)C_4 + (R_1 + R_3 + R_i)C_i$$

# -- Chain Network Elmore Delay

- **Elmore delay equation**

$$\tau_{Di} = \sum_{k=1}^{N} C_k R_{ik} \Rightarrow \tau_{DN} = \sum_{i=1}^{N} C_i \sum_{j=1}^{N} R_j = \sum_{i=1}^{N} C_i R_{ii}$$

$\tau_{D1}=c_1r_1$

$\tau_{D2}=c_1r_1 + c_2(r_1+r_2)$

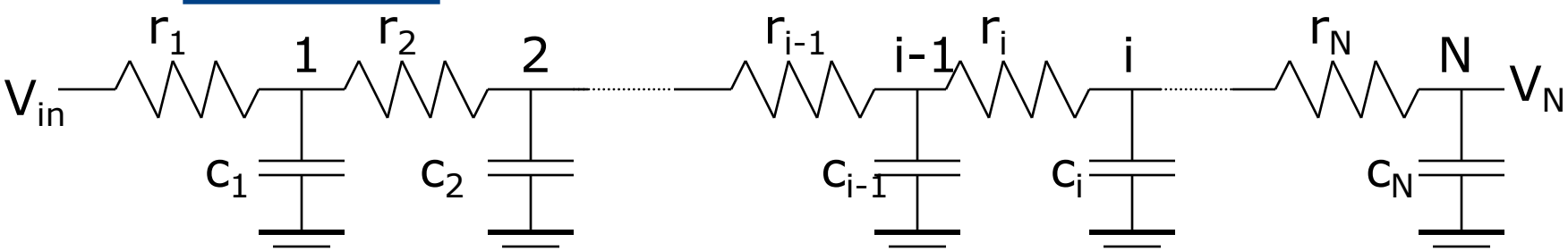


$\tau_{Di}=c_1r_1+ c_2(r_1+r_2)+\ldots+c_i(r_1+r_2+\ldots+r_i)$

$\tau_{Di}=c_1r_{eq}+ 2c_2r_{eq}+ 3c_3r_{eq}+\ldots+ ic_ir_{eq}$

# -- Distributed RC Model for Simple Wires

- A length *L* wire can be modeled by *N* segments of length *L*/*N*
  - The resistance and capacitance of each segment are given by *r L*/*N* and *c L*/*N*

$$\tau_{DN} = (\frac{L}{N})^2 (rc + 2rc + \ldots + Nrc) = (rcL^2)\frac{N(N+1)}{2N^2} = RC\frac{N+1}{2N}$$

$$N \to \infty \qquad \tau_{DN} = \frac{RC}{2} = \frac{rcL^2}{2}$$

  - For large N

-- Delay of a wire is a quadratic function of its length, *L*

-- The delay is 1/2 of that predicted by the lumped model

# Distributed *rc* line

**--SPICE Model**

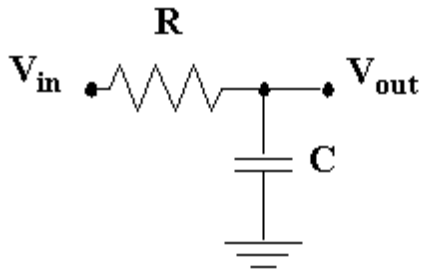


(a)

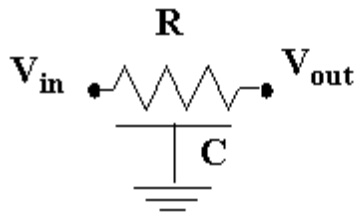


(c)

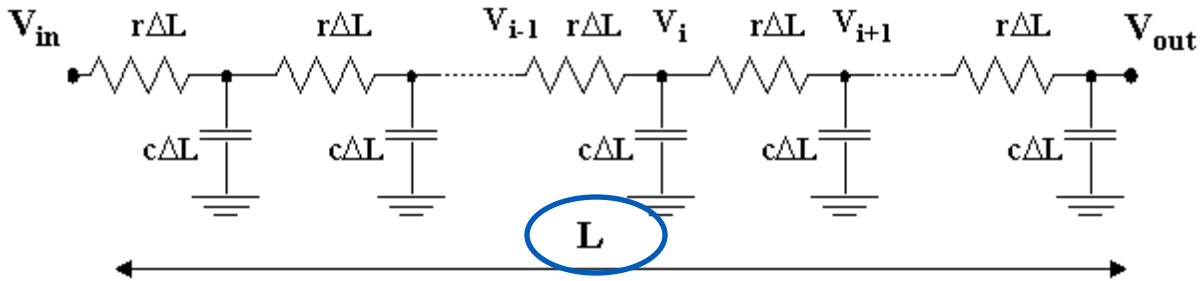


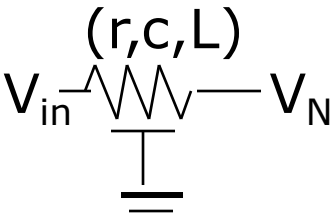


Partial differential equation: $c\Delta L\dfrac{\partial V_i}{\partial t} = \dfrac{(V_{i+1}-V_i)+(V_{i-1}-V_i)}{r\Delta L}$

$\Delta L \to 0$

Diffusion equation: $rc\dfrac{\partial V}{\partial t} = \dfrac{\partial^2 v}{\partial x^2}$ $\qquad \tau(V_{out}) = \dfrac{rcL^2}{2}$

# Step-response of *rc* line

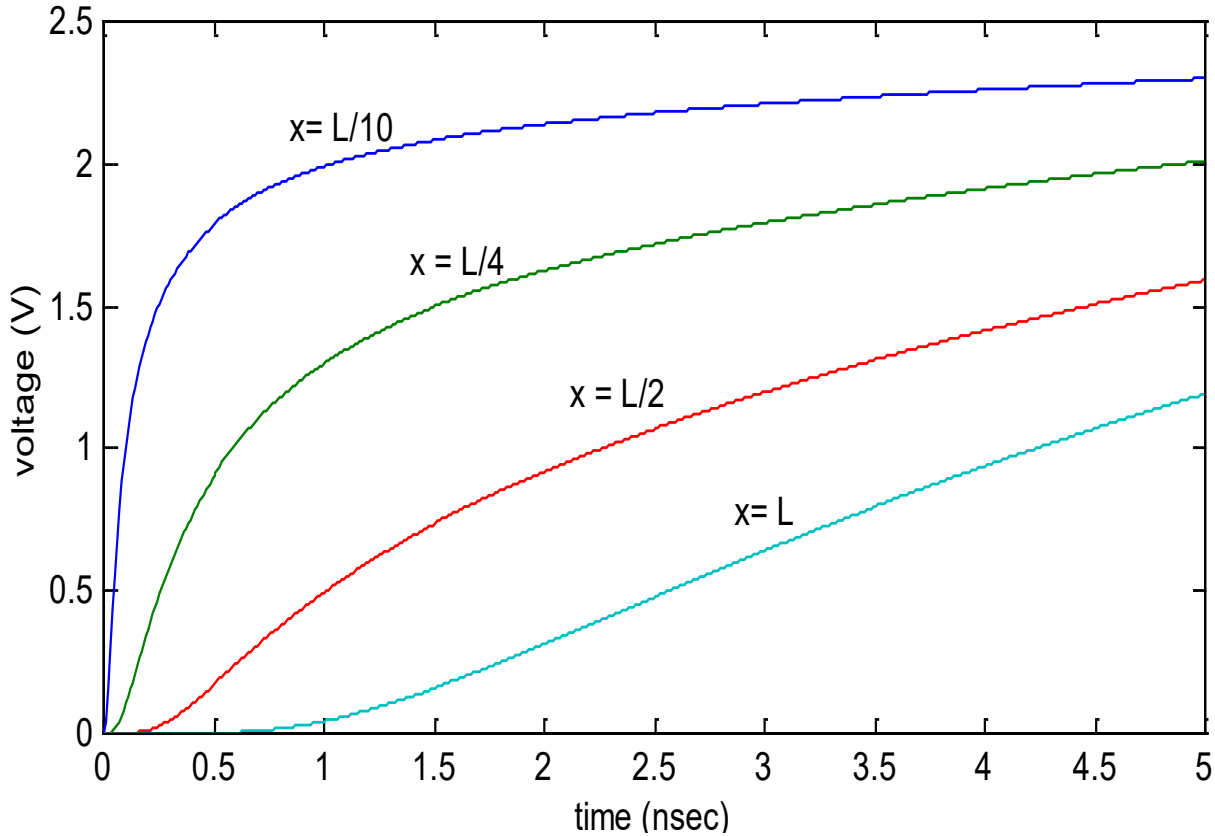


**Driving these *rc* lines and minimizing the delay and signal degradation is one of the trickiest problems in IC design.**

# Layout example of buffers insertion

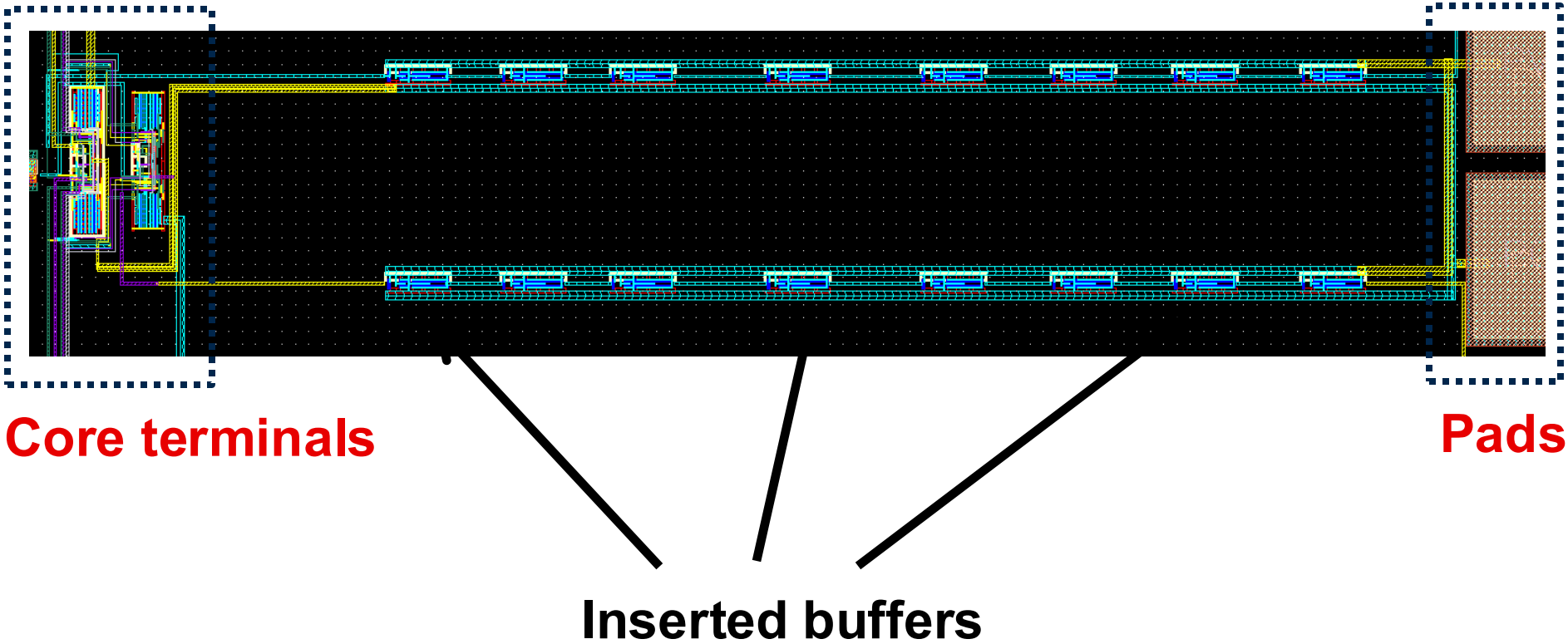

# Step Response Points

| Voltage Range | Lumped RC | Distributed RC |
|---|---|---|
| $0 \rightarrow 50\%$ ($t_p$) | 0.69 RC | 0.38 RC |
| $0 \rightarrow 63\%$ ($\tau$) | RC | 0.5 RC |
| $10\% \rightarrow 90\%$ ($t_r$) | 2.2 RC | 0.9 RC |

Time to reach the 50% point: $t = \ln(2)\tau = 0.69\tau$

Time 10%- 90% point: $t = \ln(9)\tau = 2.2\tau$

- **Example** Consider a Al1 wire: 10 cm long and 1 μm wide
  - Using a lumped C only model with a source resistance ($R_{Driver}$) of 10 kΩ and a total lumped capacitance ($C_{lumped}$) of 11 pF

    $t_{50\%}$ = 0.69 x 10 kΩ x 11pF = 76 ns

    $t_{90\%}$ = 2.2 x 10 kΩ x 11pF = 242 ns
  - Using a distributed RC model with c = 110 aF/μm and r = 0.075 Ω/μm

    $t_{50\%}$ = 0.38 x (0.075 Ω/μm) x (110 aF/μm) x $(10^5\ \mu m)^2$ = 31.4 ns

    $t_{90\%}$ = 0.9 x (0.075 Ω/μm) x (110 aF/μm) x $(10^5\ \mu m)^2$ = 74.25 ns

    Poly: $t_{50\%}$ = 0.38 x (150 Ω/μm) x (88+2×54 aF/μm) x $(10^5\ \mu m)^2$ = 112 μs

    Al5: $t_{50\%}$ = 0.38 x (0.0375 Ω/μm) x (5.2+2×12 aF/μm) x $(10^5\ \mu m)^2$ = 4.2 ns

# Driving an *rc* line

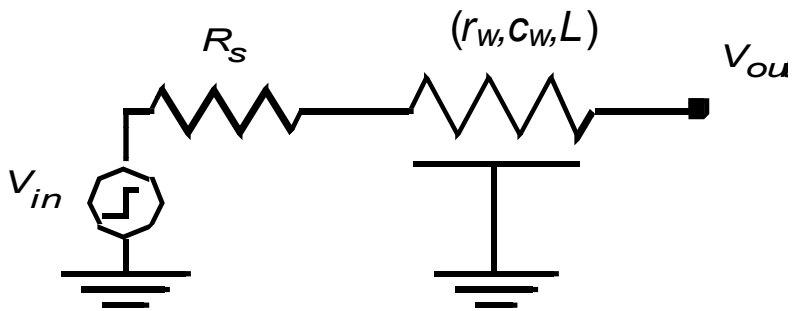


$$\tau_D = R_s C_w + \frac{R_w C_w}{2} = R_s C_w + 0.5 r_w c_w L^2$$

$$t_p = 0.69 R_s C_w + 0.38 R_w C_w$$

The delay introduced by the wire resistance becomes dominant when $R_w C_w/2 \geq R_s C_w$, or $L \geq 2Rs/r$

# Wire Sizing

- Wire **length** is determined by layout architecture, but we can choose wire **width** to minimize delay.
- Wire width can vary with distance from driver to adjust the resistance which drives downstream capacitance.
- Wire with minimum delay has an **exponential taper**.
- Optimal tapering improves delay by about 8%.

*Approximate tapering with a few rectangular segments*

# Example of Approximate tapering

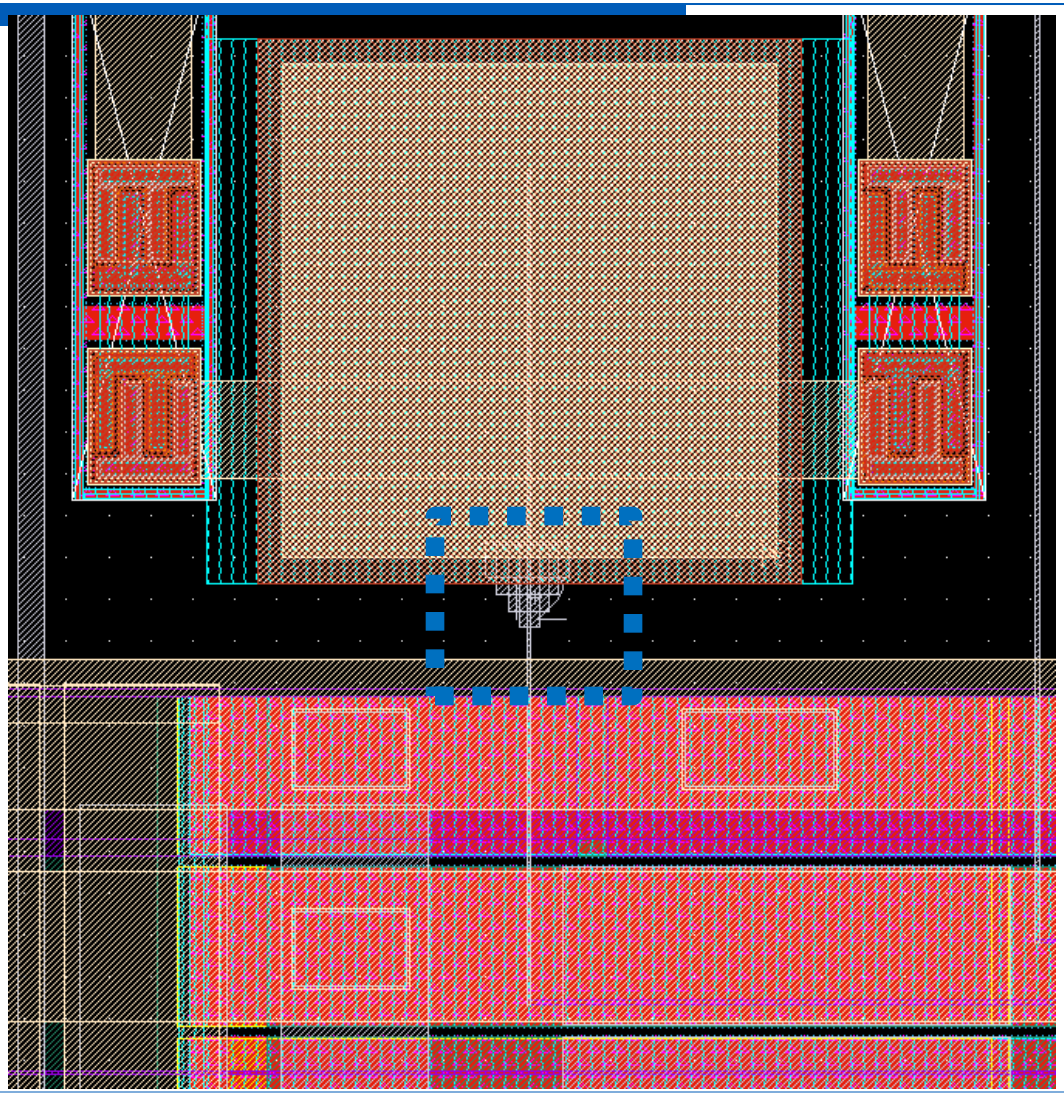

# Signal Integrity(信号完整性)

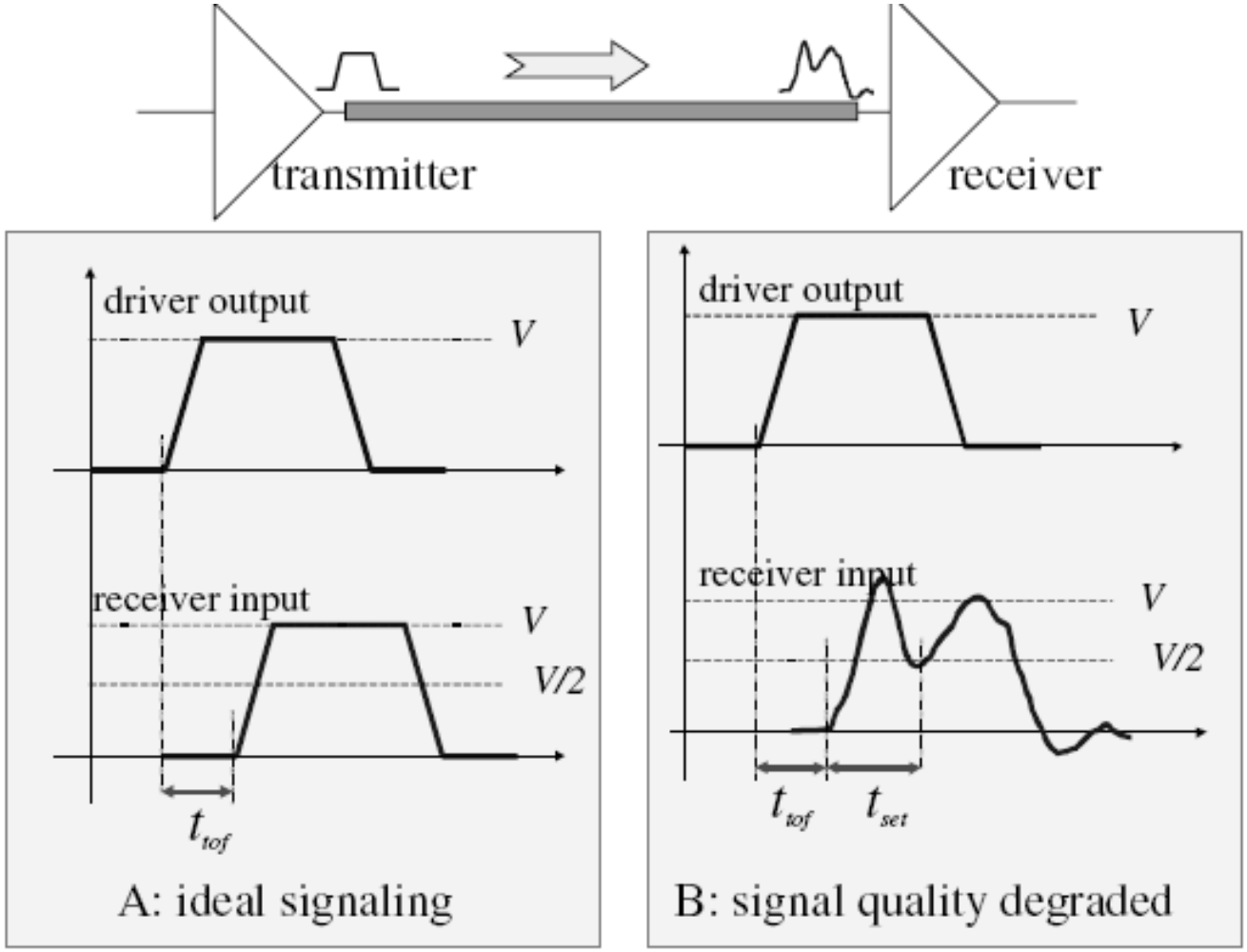

# Noise

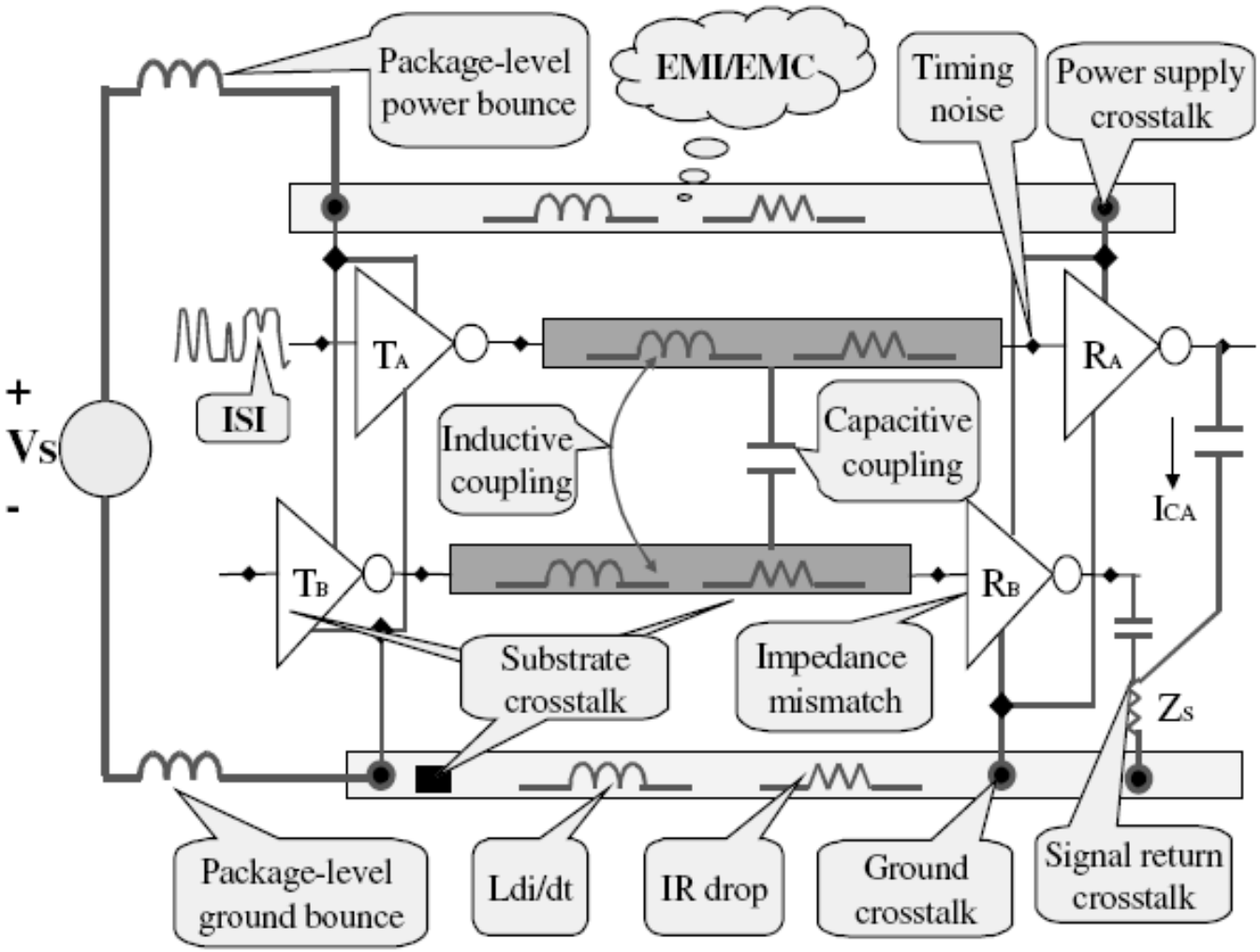
Package-level power bounce
EMI/EMC
Timing noise
Power supply crosstalk
ISI
TA
RA
+
Vs
-
Inductive coupling
Capacitive coupling
ICA
TB
RB
Substrate crosstalk
Impedance mismatch
Zs
Package-level ground bounce
Ldi/dt
IR drop
Ground crosstalk
Signal return crosstalk

# Perspective

- Better interconnect (Cu) and insulation material (polymers and air)
- Differentiate between wires
  - Local: density, low-cap
  - Global: low-resistance

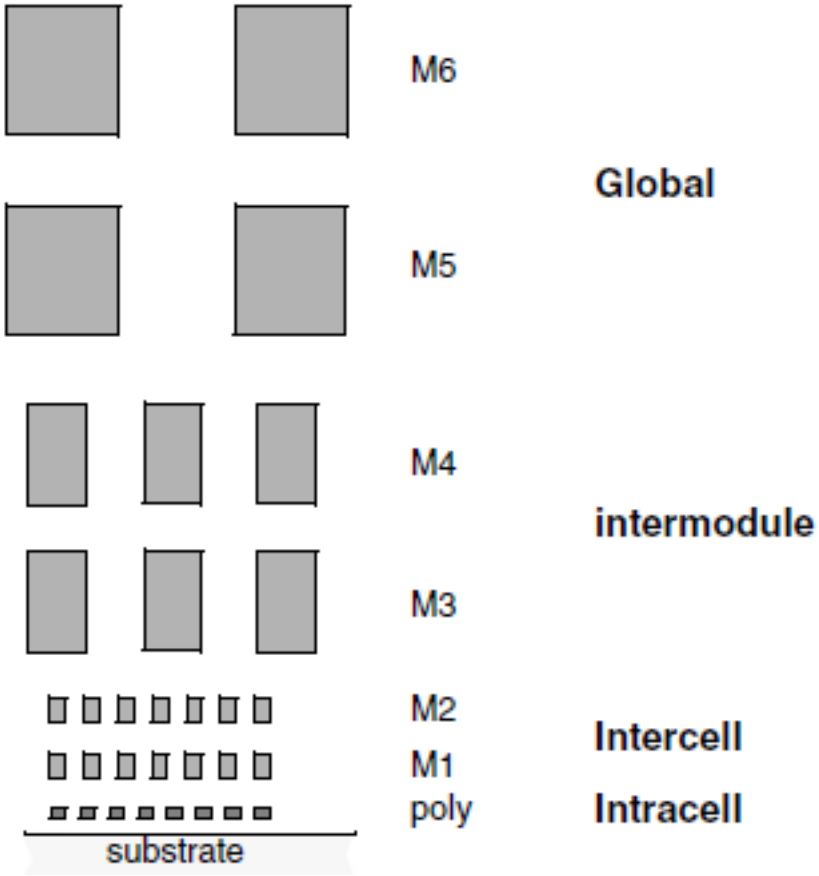

# 集成电路原理与设计

# 导线

## *Wire*

谭志超
zhichaotan@zju.edu.cn